EEE114
Engineering Drawing

Orthographic Projection

Yrd.Doç. Dr. Engin PINAR

Why Orthographic Projection is used in technical drawing

Orthographic projection is a method of producing a number of separate two-dimensional inter-related views, which are mutually at right angles to each other. Using this projection, even the most complex shape can be fully described.

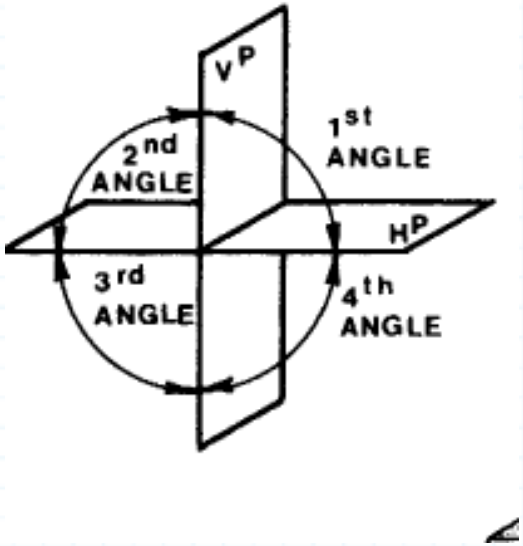

Orthographic projection is based on two principal planes — one horizontal (HP) and one vertical (VP) — intersecting each other

3-D projections are useful in that they provide an image that is similar to the image in the designer's mind's eye. But 3-D projections are often weak in providing adequate details of the object, and there is often some distortion of the object.
For instance, a circular hole becomes an ellipse in an isometric 3-D projection.
Orthographic projection are used to overcome the weaknesses of 3-D projections.
Orthographic projections are a collection of flat 2-D drawings of the different sides of an object.

Orthographic view

Orthographic projection is a parallel projection technique in which the parallel lines of sight are ***perpendicular*** to the projection plane

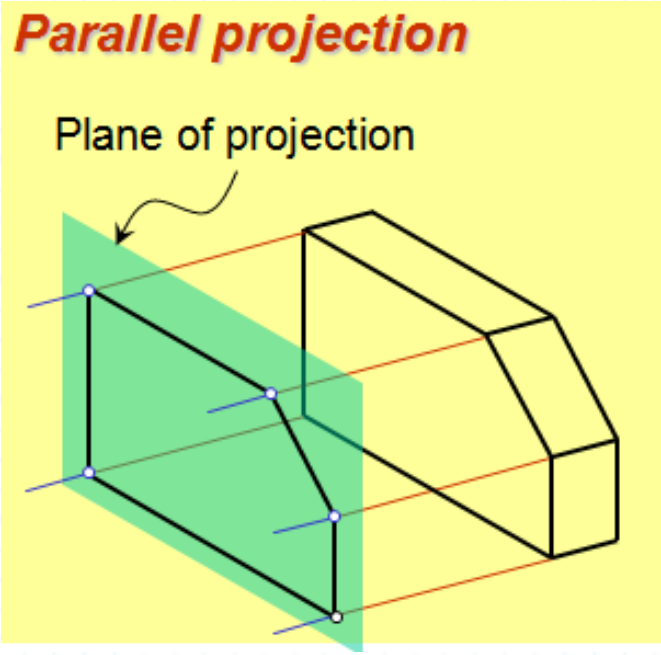

3-D projections are useful in that they provide an image that is similar to the image in the designer's mind's eye. But 3-D projections are often weak in providing adequate details of the object, and there is often some distortion of the object.
For instance, a circular hole becomes an ellipse in an isometric 3-D projection. **Orthographic projection** are used to overcome the weaknesses of 3-D projections. Orthographic projections are a collection of flat 2-D drawings of the different sides of an object.

Orthographic view

Orthographic view depends on relative position of the object to the line of sight. It uses multiple views of the object, from points of view rotated about the object's center through increments of 90°.

The views may be considered to be obtained by rotating the object about its center through increments of 90°.

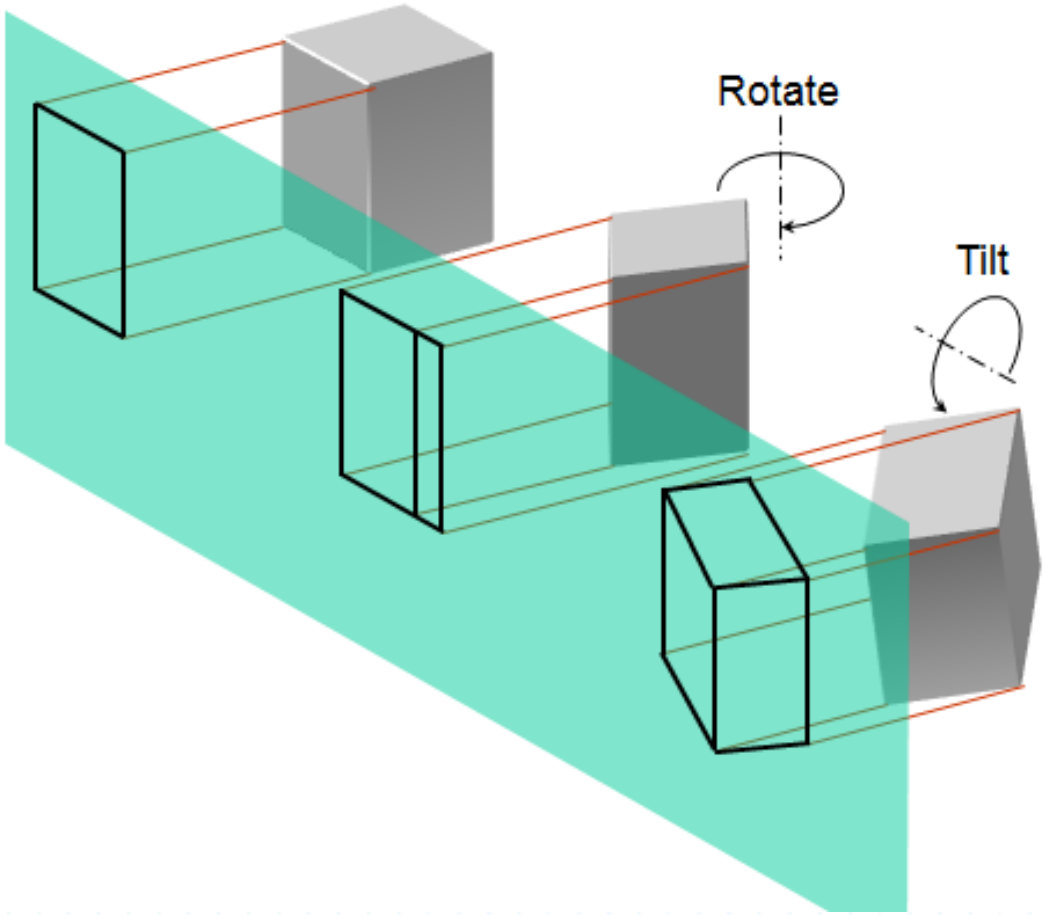

Orthographic View

Advantage It represents accurate **shape and size.**

Disadvantage Require practice in writing and reading.

Example Multiviews drawing (2-view drawing)

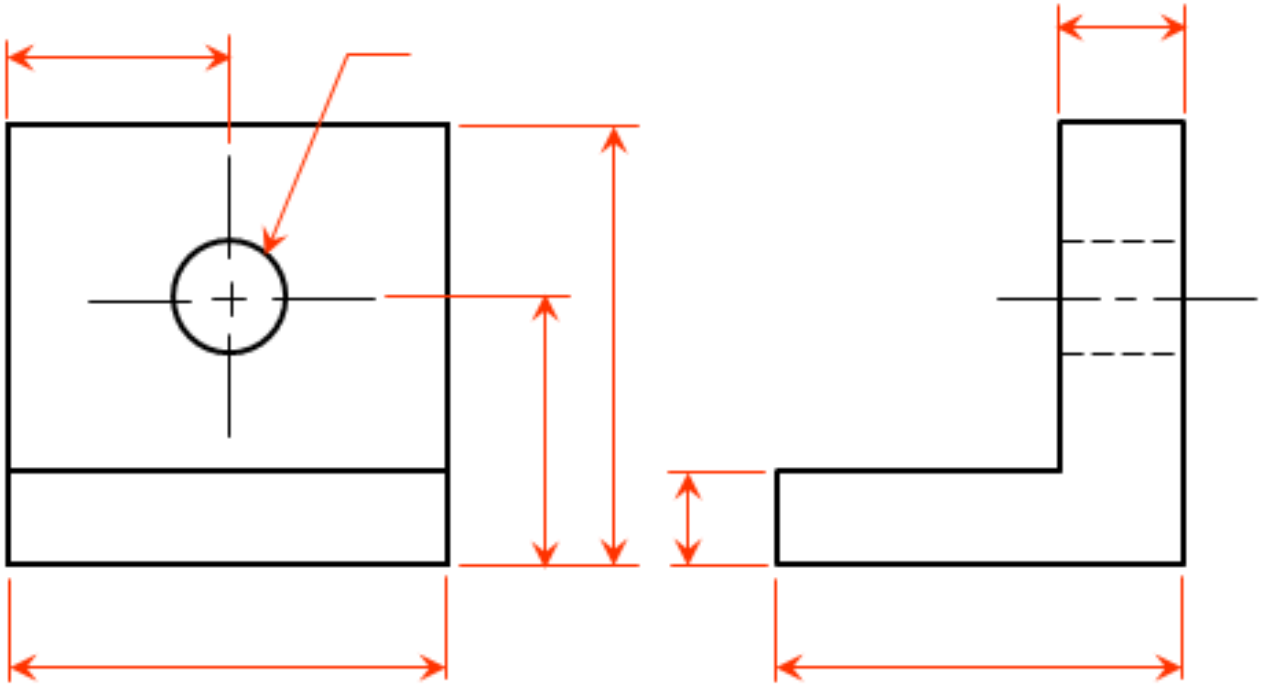

Orthographic View

Only two forms of orthographic projections are used: first-angle projection (‘European ISO-E’) and third-angle projection (‘American ISO-A’).

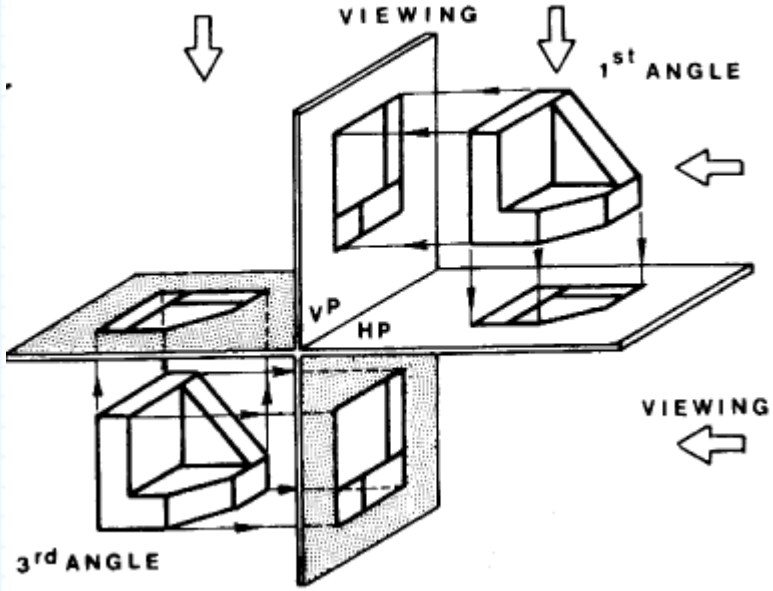

On engineering drawings, the projection angle is denoted by an international symbol consisting of a truncated cone, respectively for first-angle (FR) and third-angle (US):

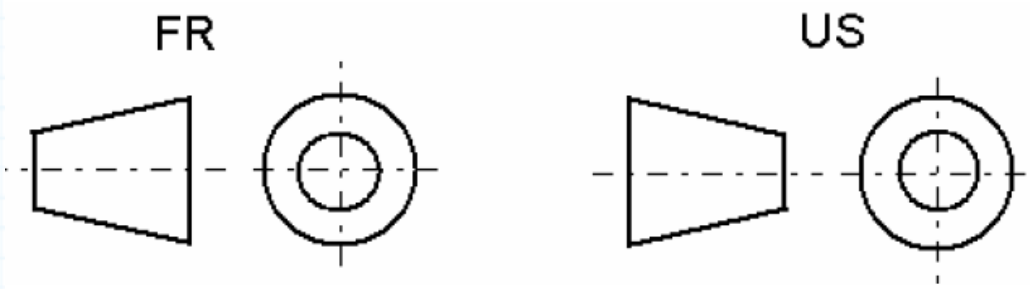

(‘European ISO-E’) (‘American ISO-A’)

View Selection Steps

STEP 1 : Orient the Object

Orient the object to the best position relative to a glass box. The object should presents its features in actualsize and shape in orthographic views.

GOOD

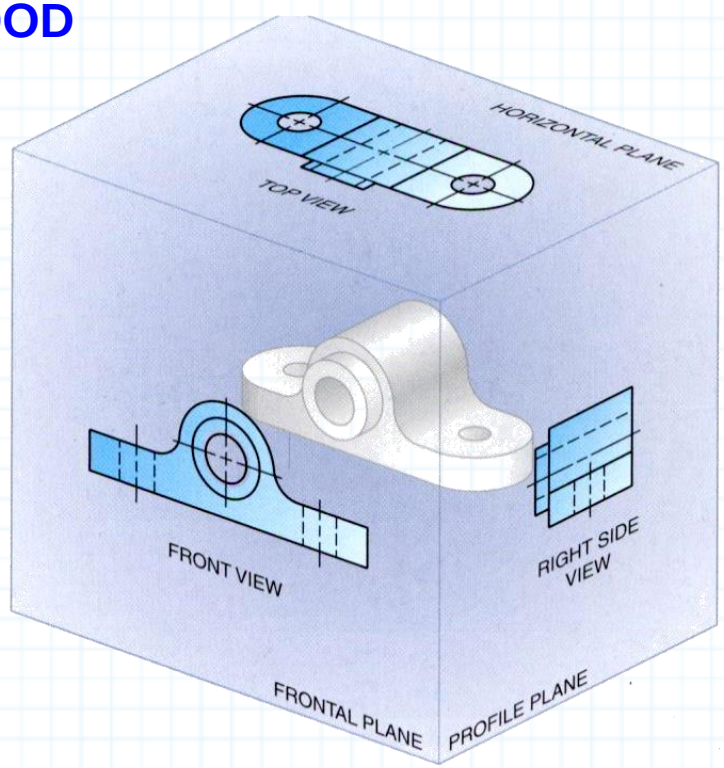

NO !

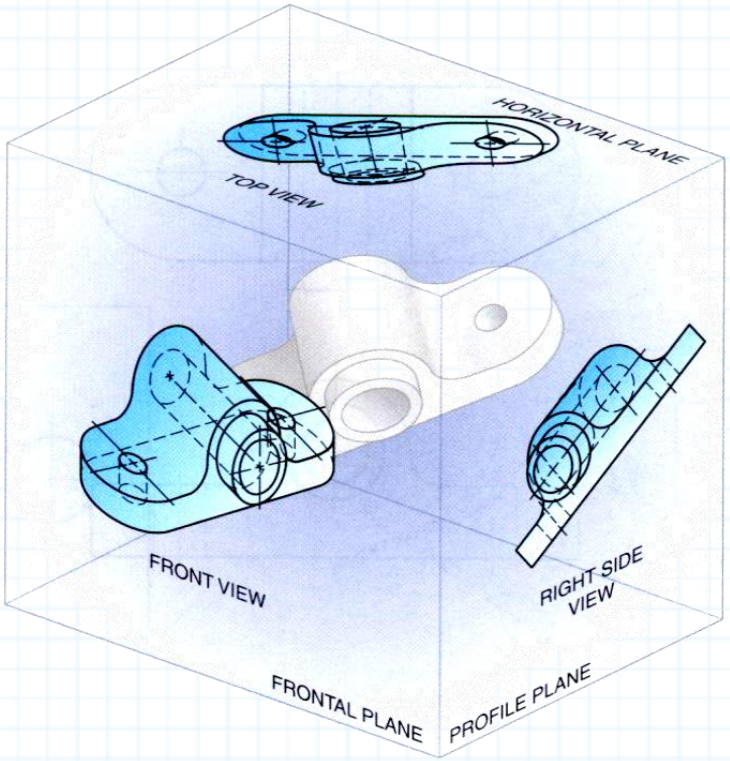

STEP 2 : Select a Front View

The object's **longest dimension** should be presented as a **width**.

First choice

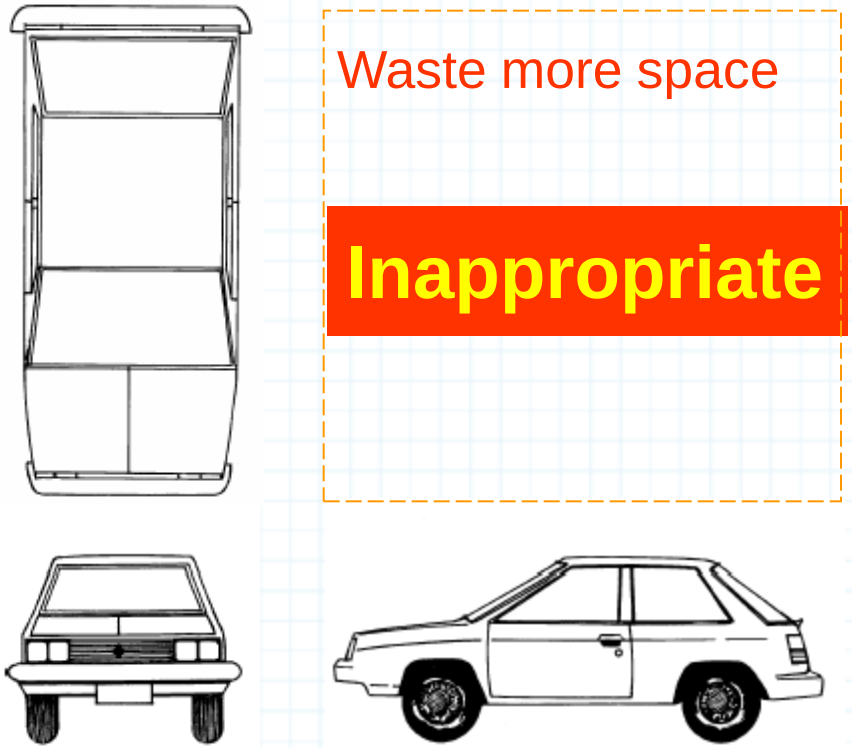

Waste more space

Inappropriate

When the glass cube is unfolded:

- Front view: Height and Width
- Top view: Width and Depth
- Right view: Depth and Height

Second choice

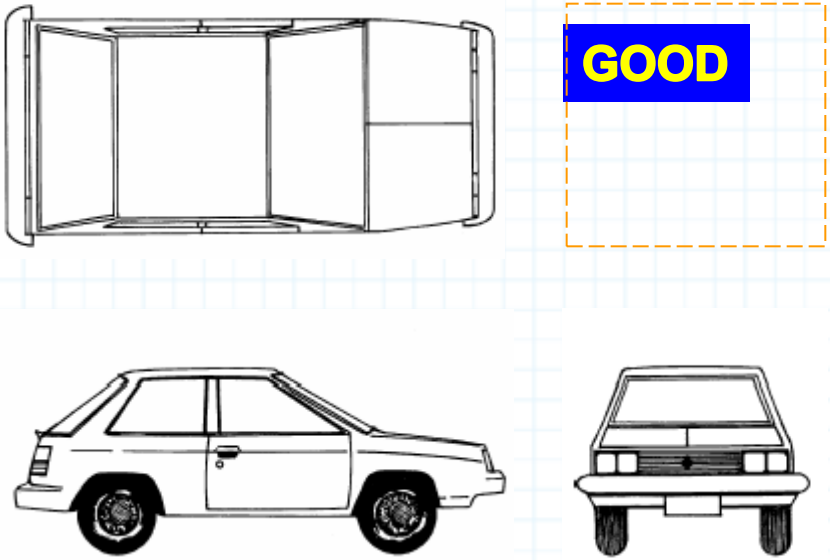

GOOD

STEP 2 : Select a Front View

Choose the view that have the fewest number of hidden lines.

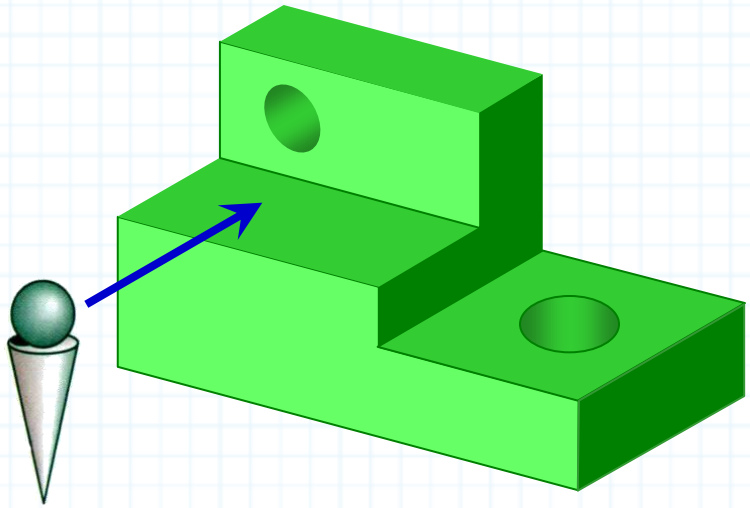

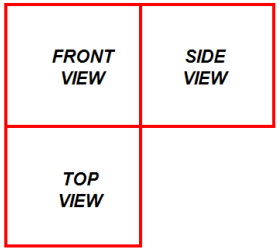

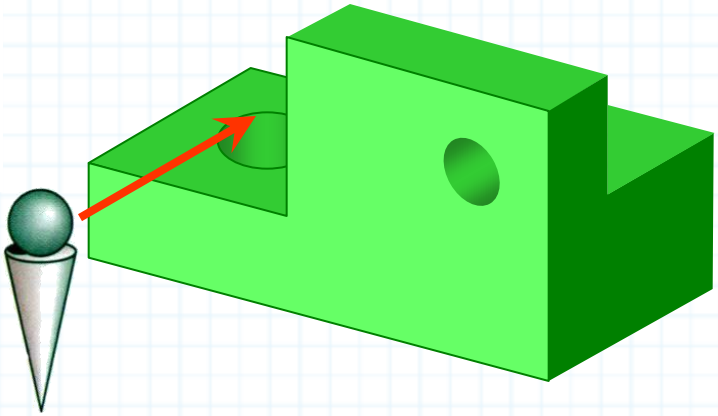

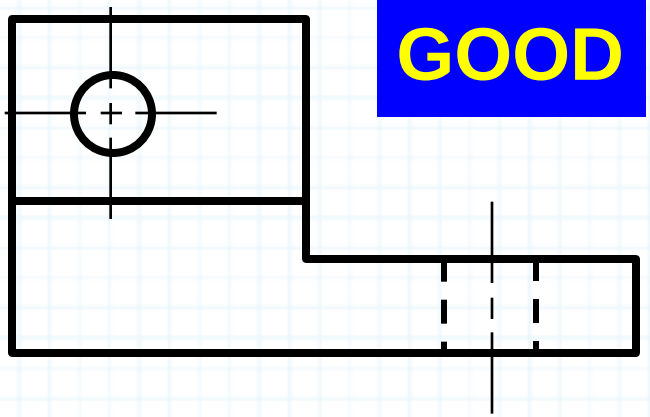

GOOD

Inappropriate

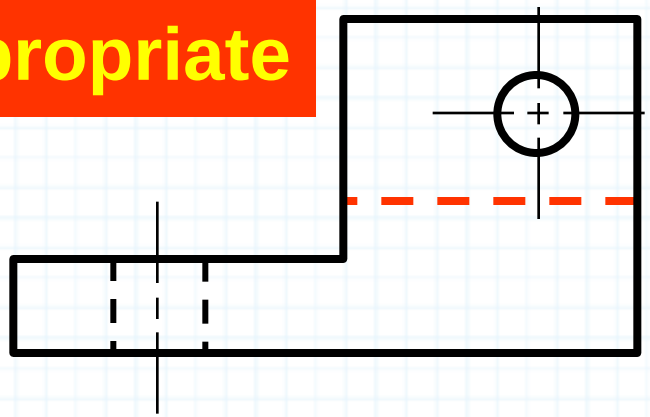

STEP 3 : Select an Adjacent View

Choose the view that have the fewest number of hidden lines and minimum number of views that can represent the major features of the object

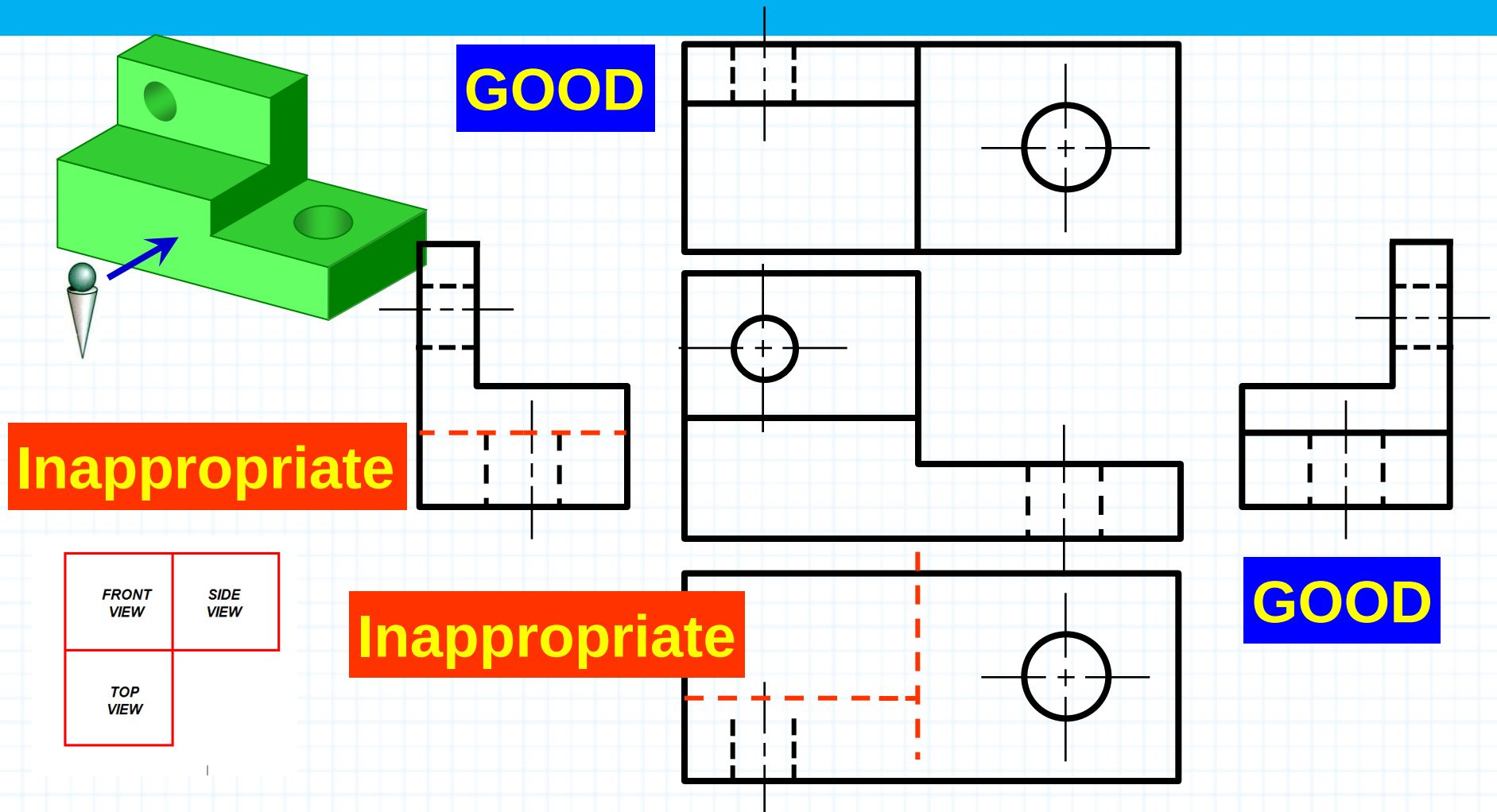

Object Features

Edges are lines that represent the boundary between two faces.

Corners Represent the intersection of two or more edges.

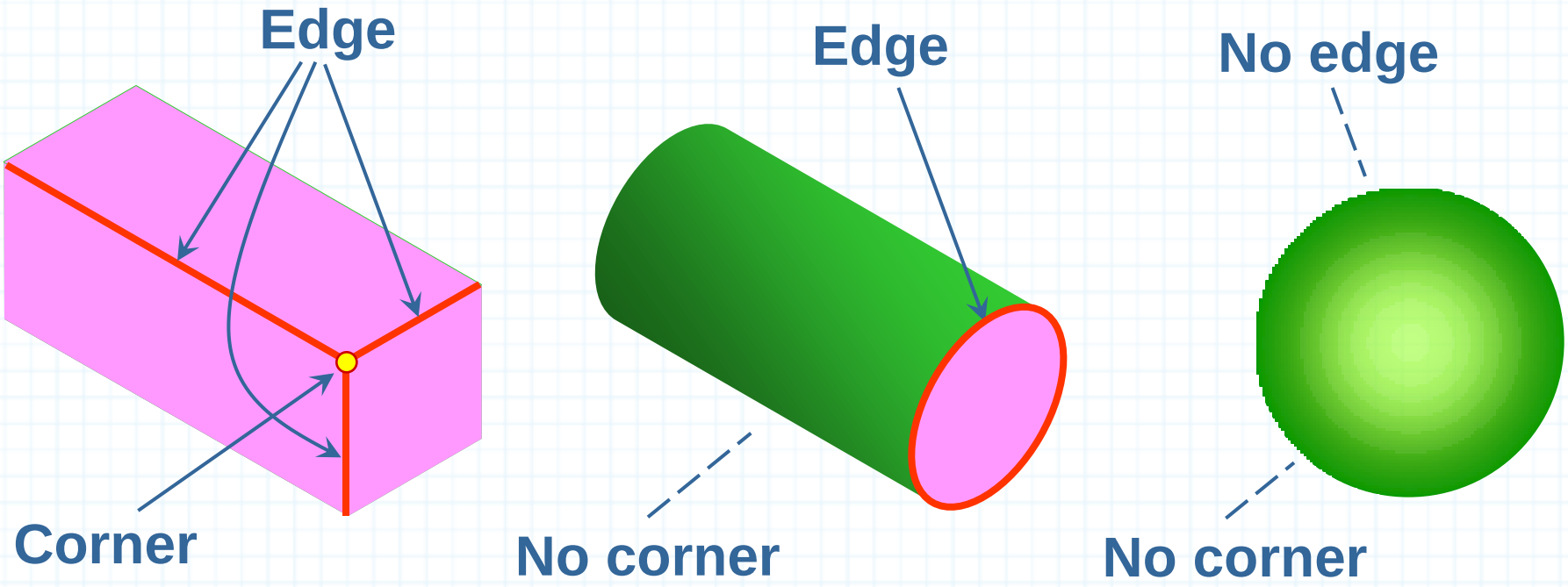

Object Features

Surfaces are areas that are bounded by edges or limiting element.

Limiting element is a line that represents the last visible part of the curve surface.

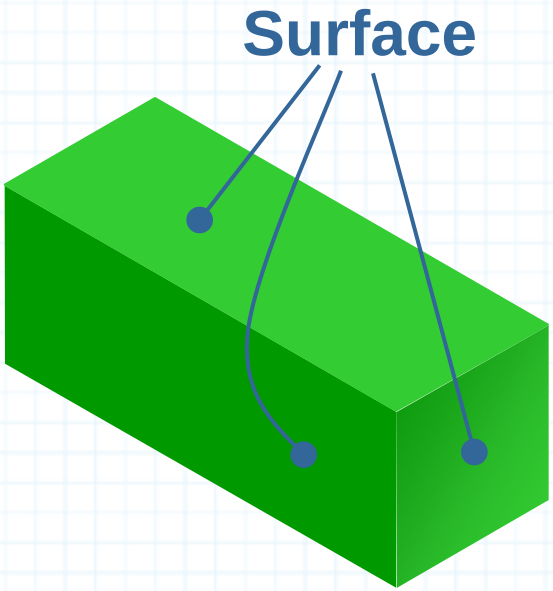

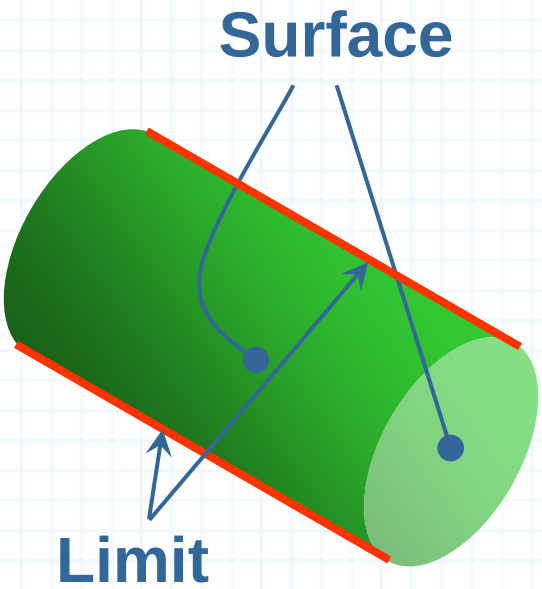

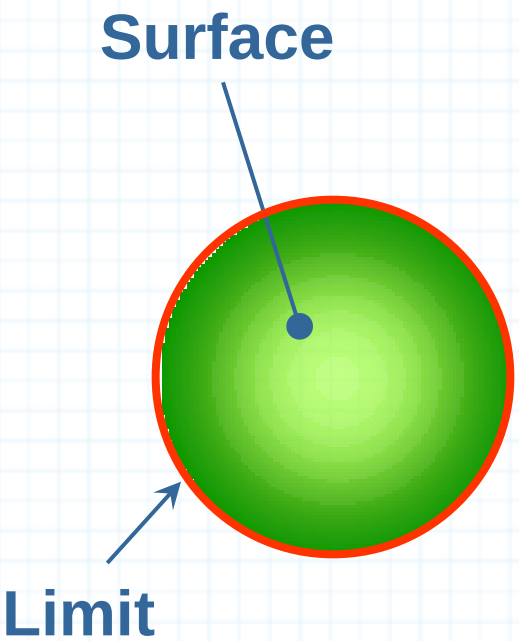

Standard Views of Primitive Solids

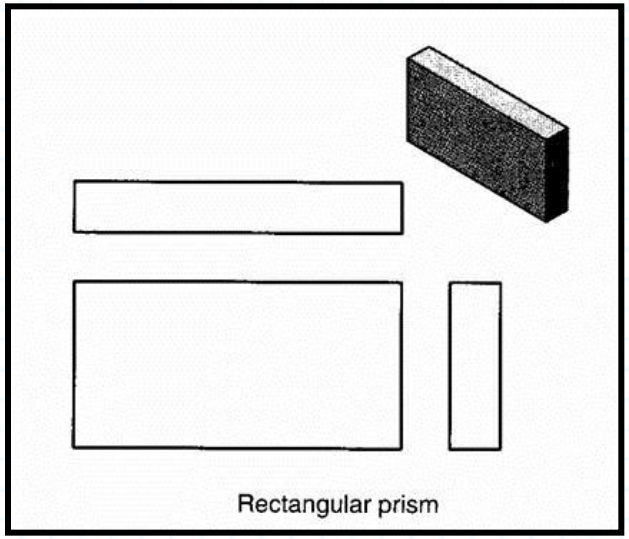
Rectangular prism

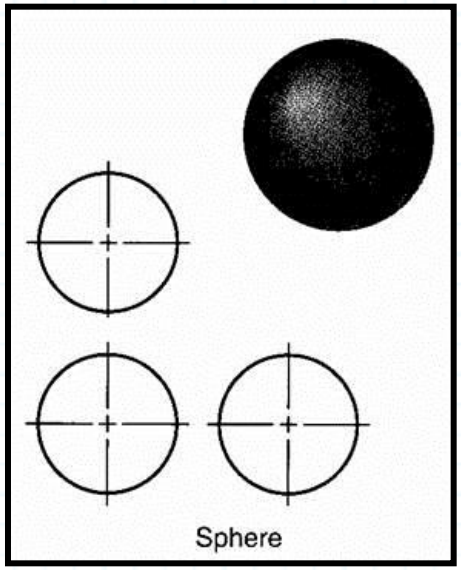
Sphere

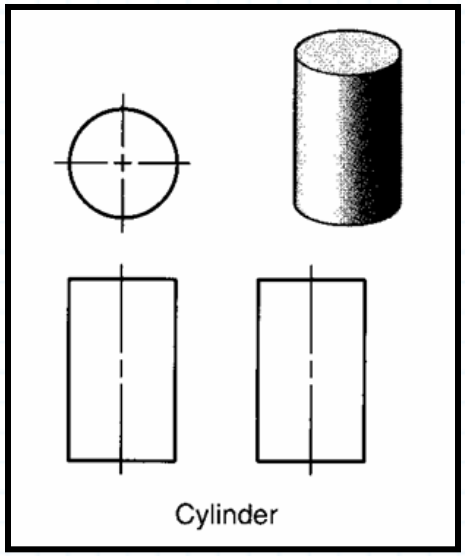
Cylinder

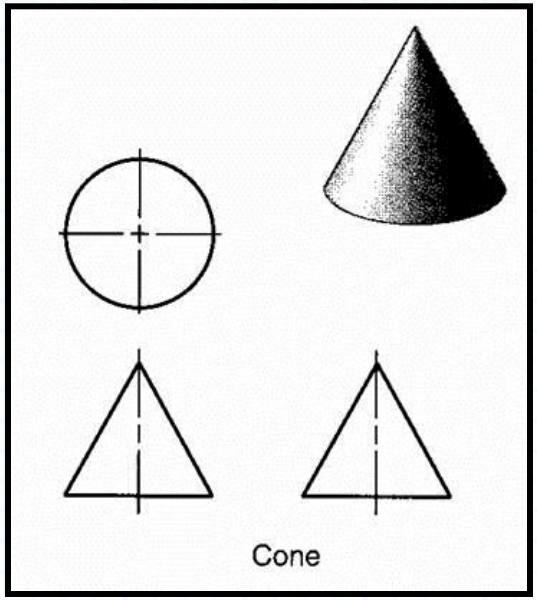
Cone

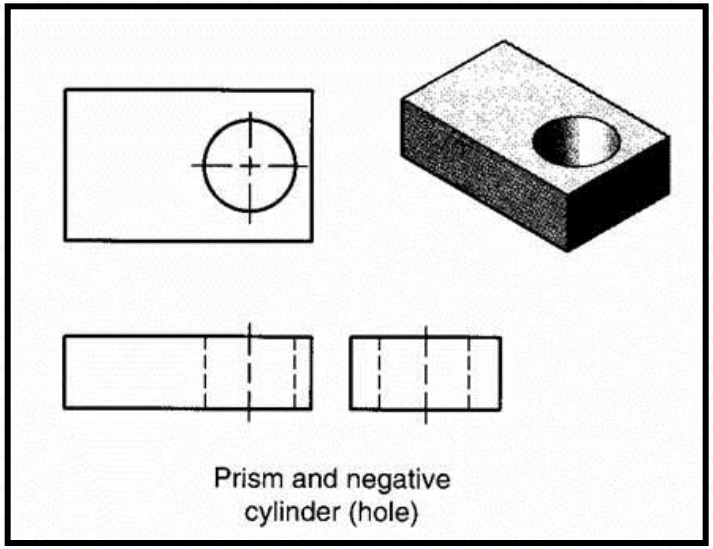
Prism and negative cylinder (hole)

Fillets, Rounds & Chamfers

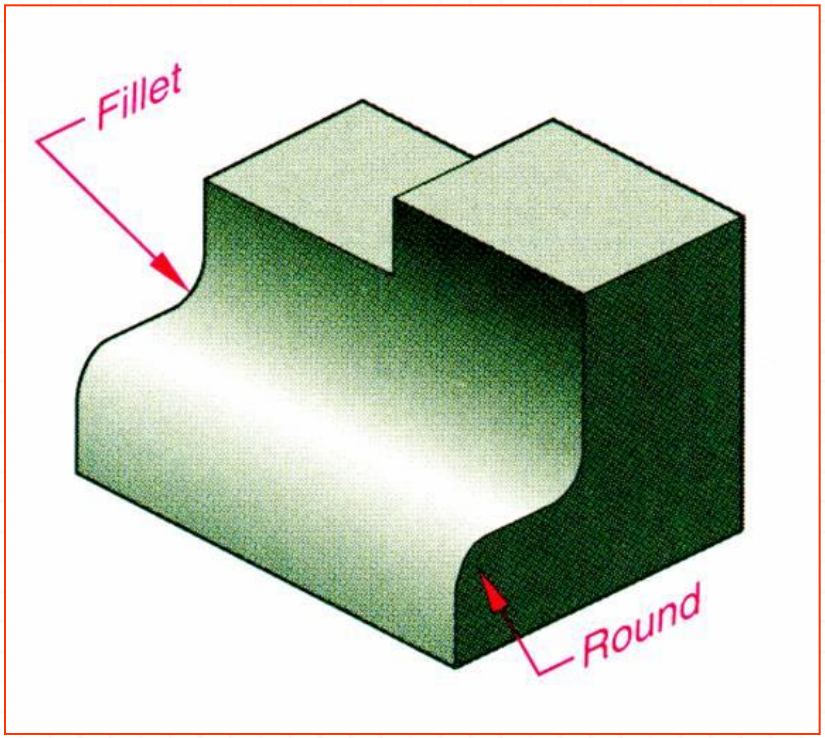

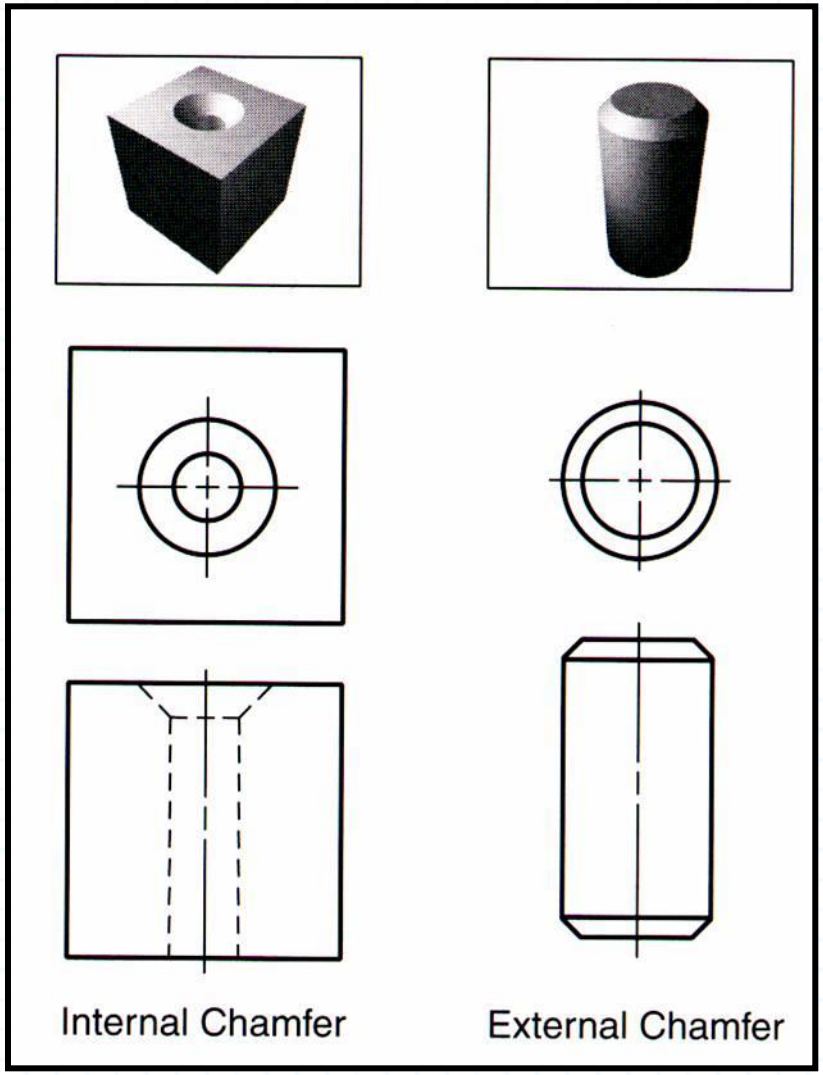

Edge Lines – Principal & Inclined

Principal lines appear vertical horizontal or as point views. Inclined lines appear inclined one view.

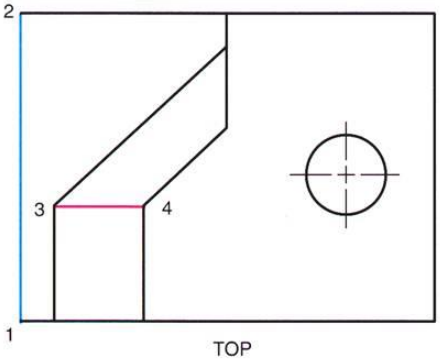

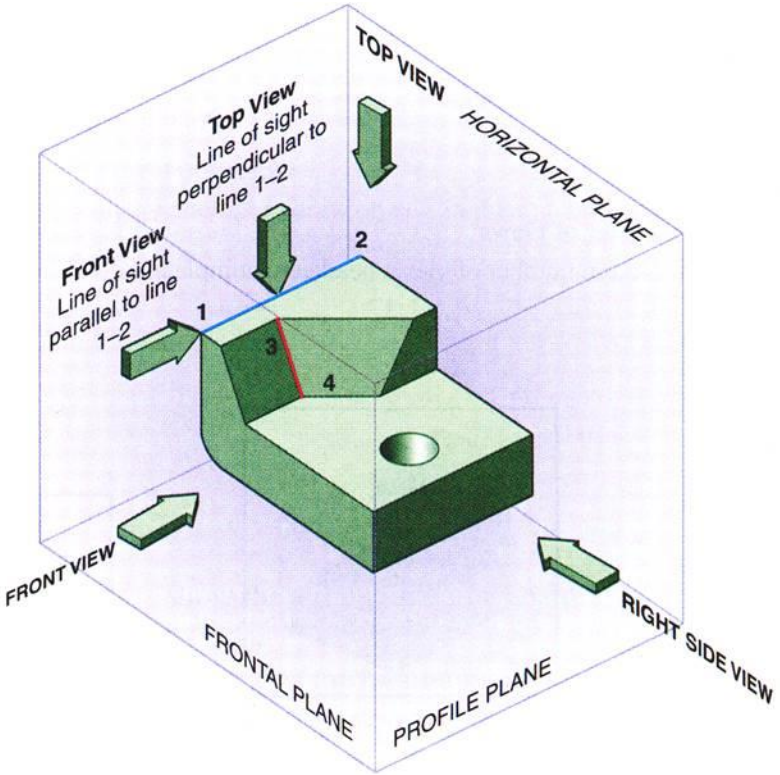

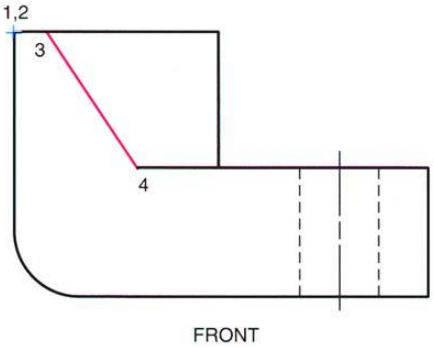

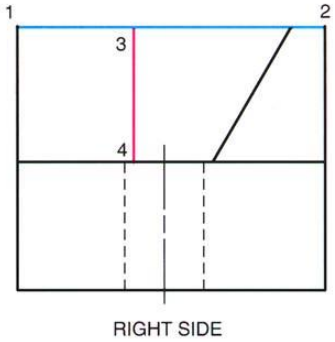

Edge lines are lines that represent the boundary between two faces

Edge Lines – Oblique

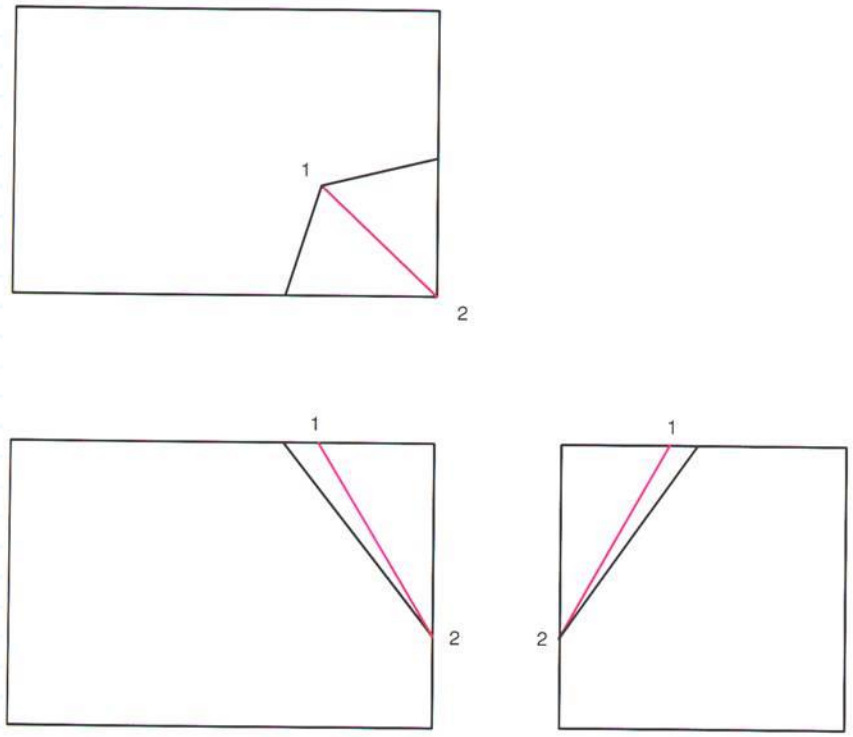

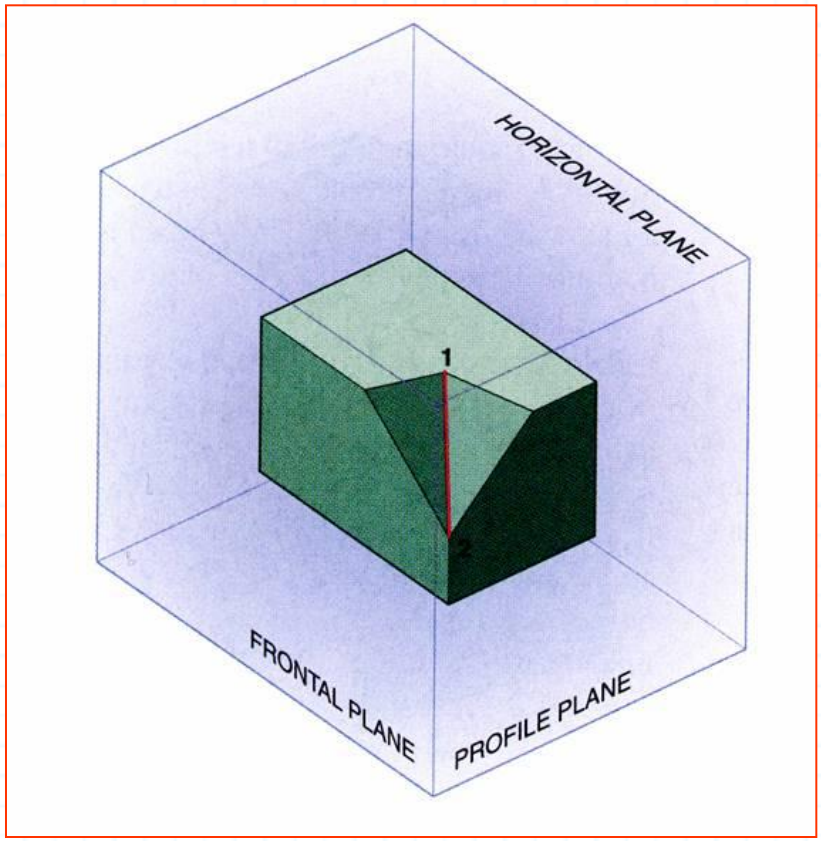

Oblique line appears inclined in all views

Type of Planes

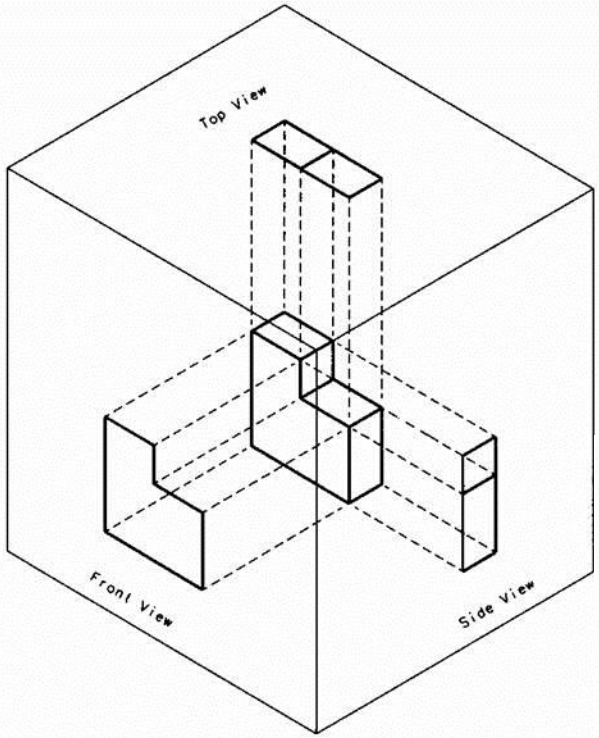

Principal

Oblique

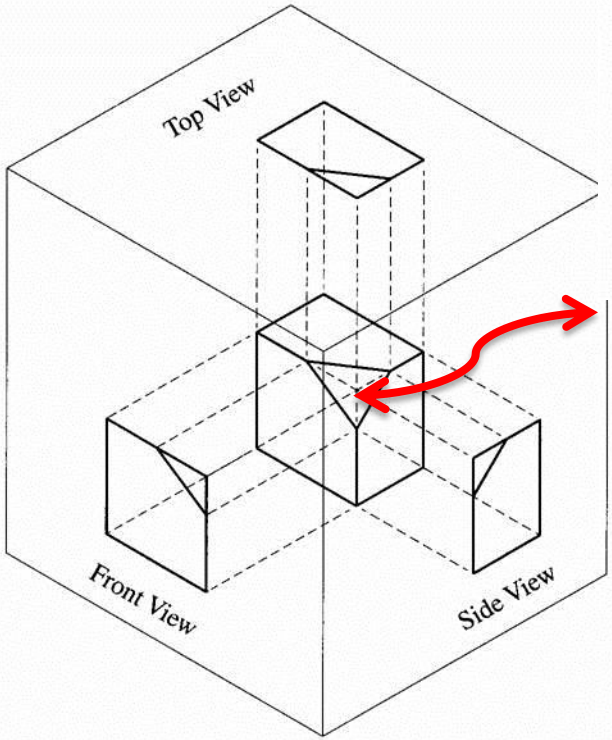

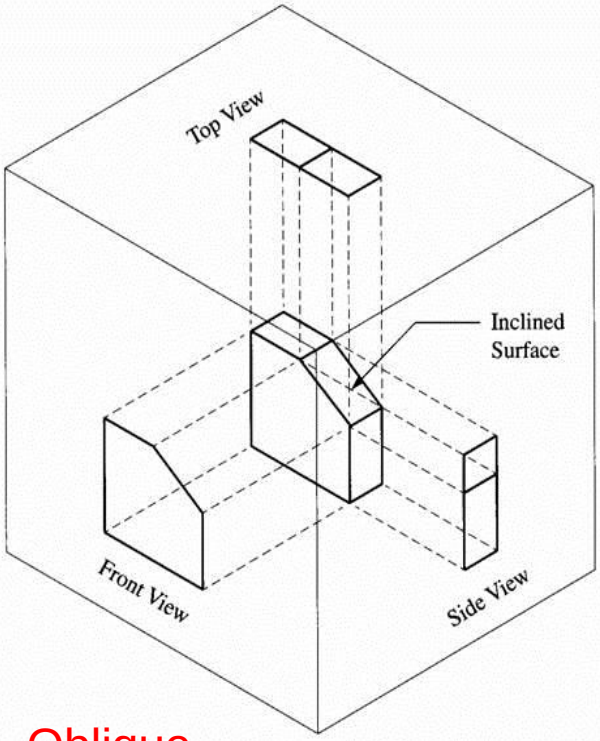

Oblique surface

Inclined

Principal Planes

Principle planes are parallel to principal orthographic planes

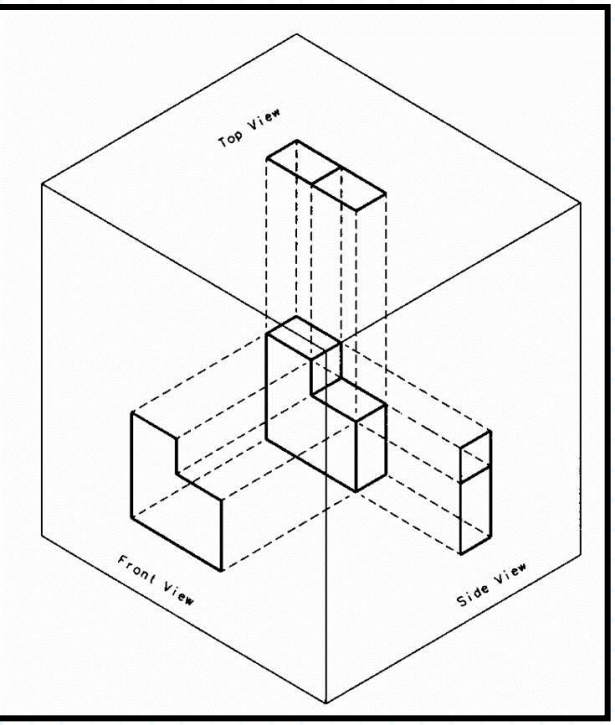

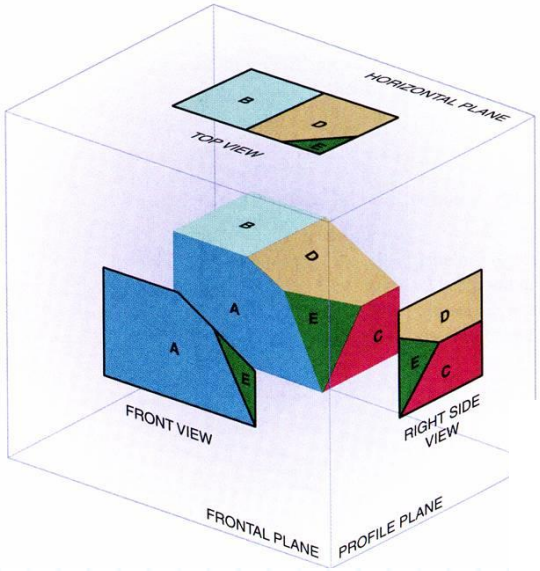

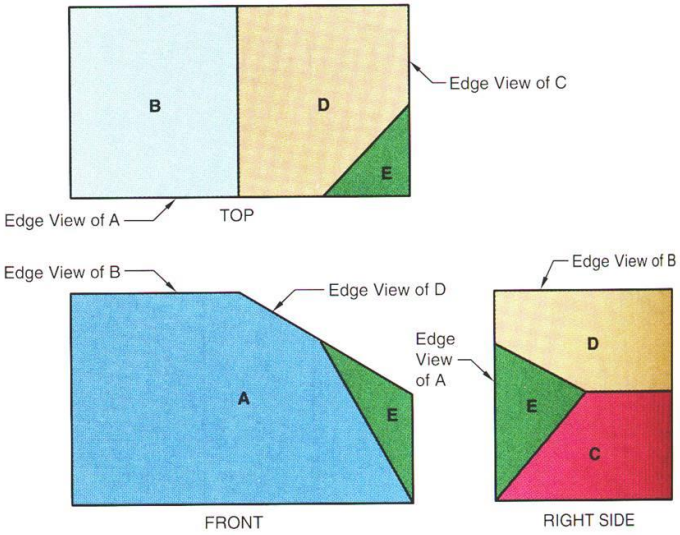

Principal planes appear in true size in one plane and as an edge view in the other two planes.

Inclined Planes

Inclined planes are perpendicular to two opposite orthographic planes.

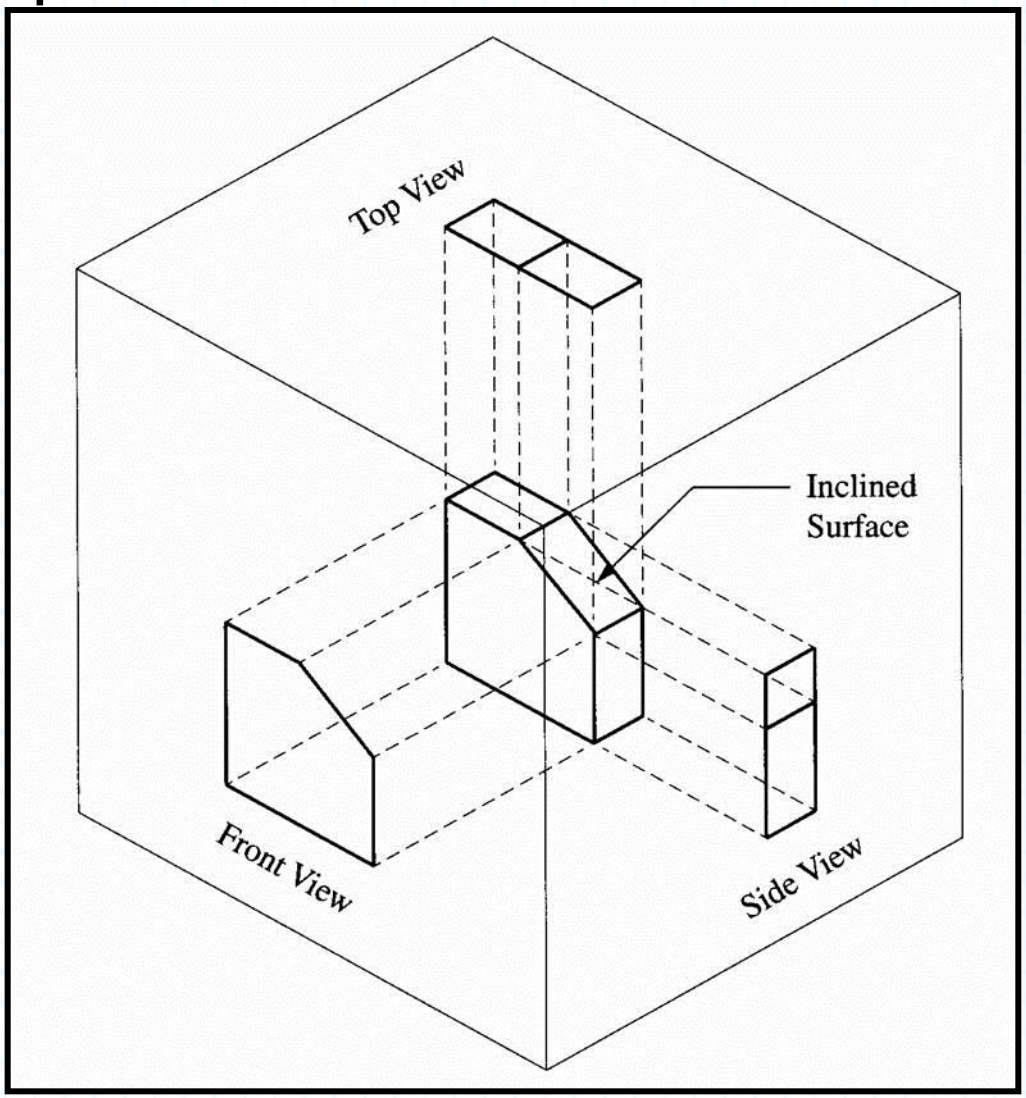

Oblique Planes

Oblique planes are neither parallel nor perpendicular to any principal orthographic planes.

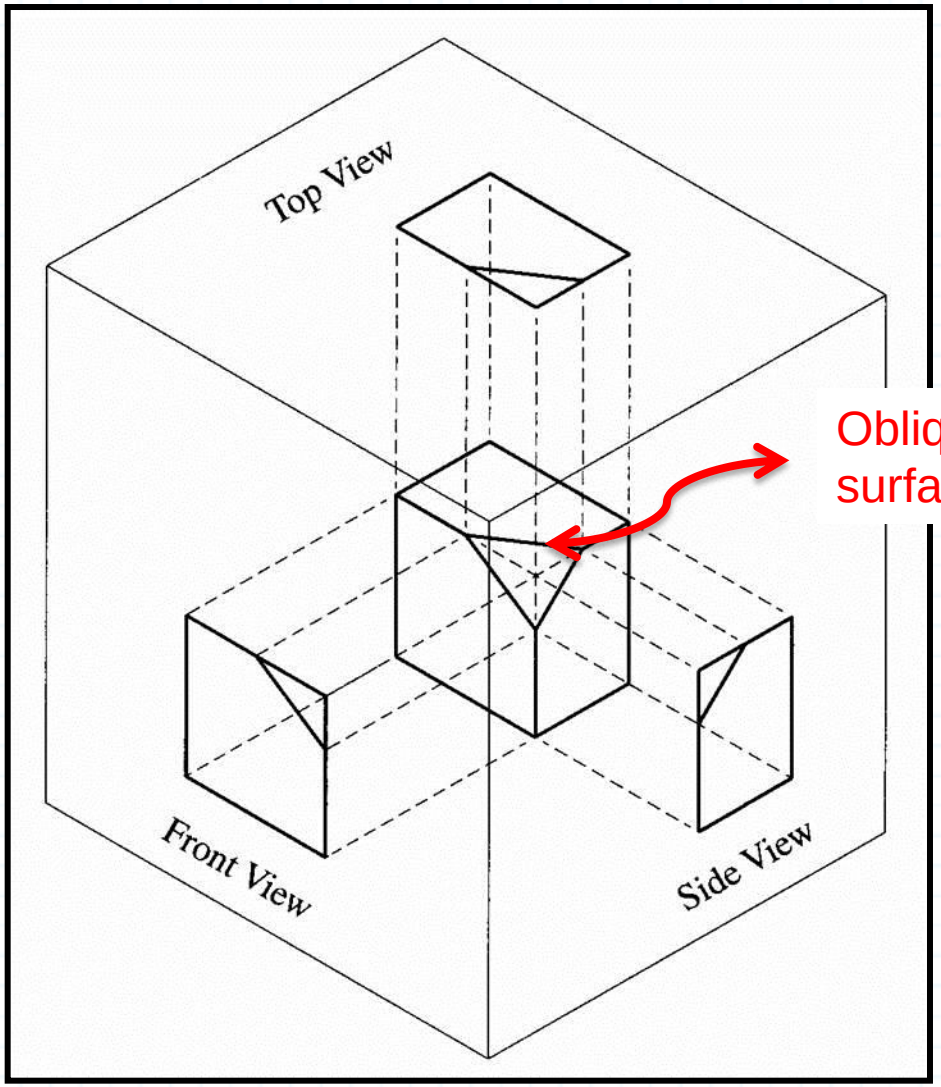

Top view

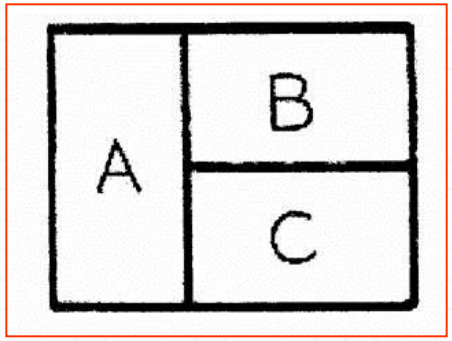

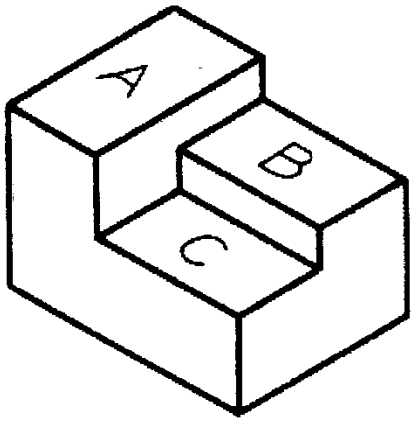

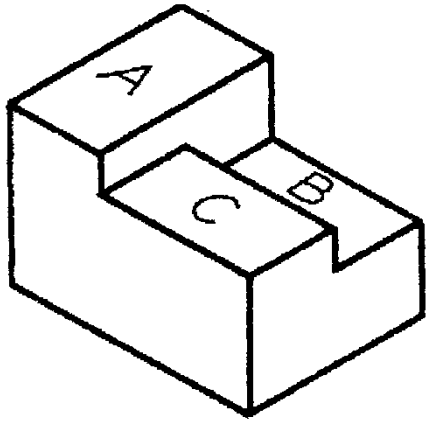

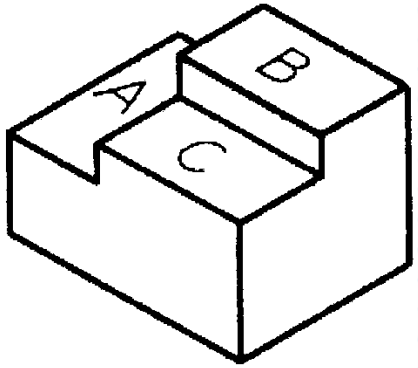

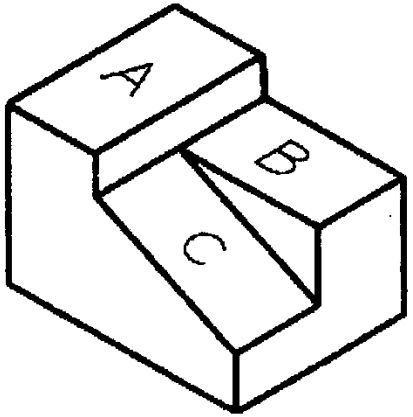

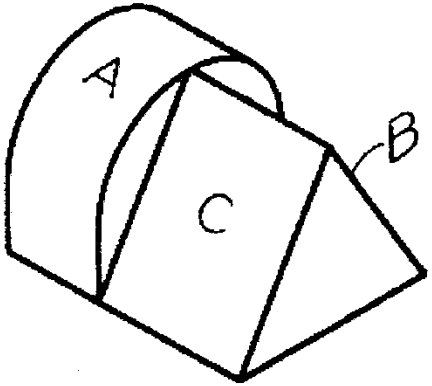

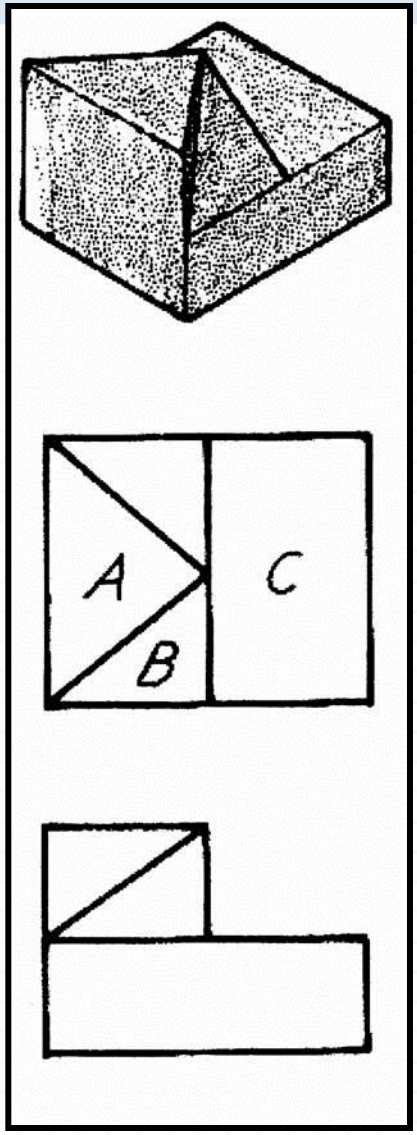
A
B
C

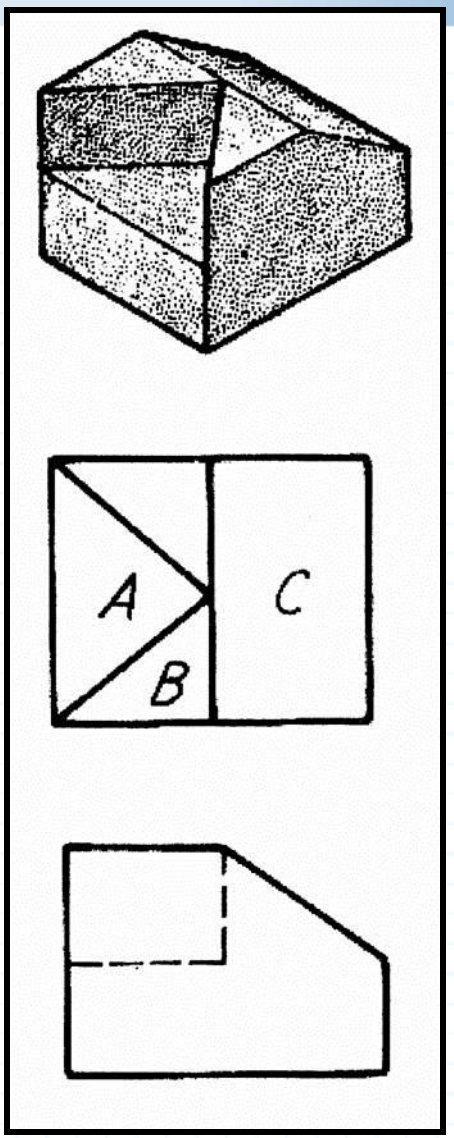
A
B
C

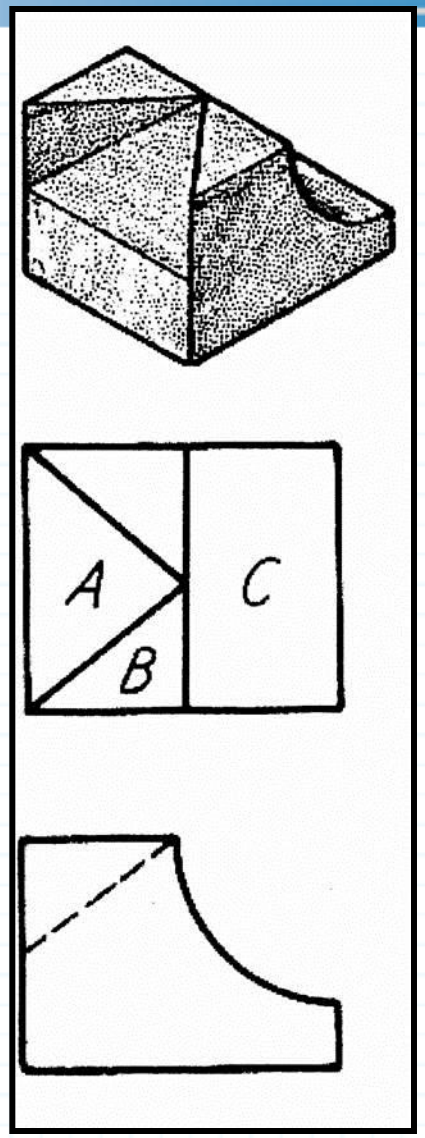
A
B
C

Basic Line Types

Standards are set of rules that govern how Technical drawings are represented.

- Drawing standards are used so that drawings convey the same meaning to everyone who reads them.

Basic Line Types

Types of Lines	Appearance	Name according to application
Continuous thick line		Visible line
Continuous thin line		Dimension line Extension line Leader line
Dash thick line		Hidden line
Chain thin line		Center line

Meaning of Lines

Visible lines represent features that can be seen in the current view

Hidden lines represent features that <u>can not be seen</u> in the current view

Center line represents symmetry, path of motion, centers of circles, axis of axisymmetrical parts

Dimension and Extension lines indicate the sizes and location of features on a drawing

Example : Line conventions in engineering drawing

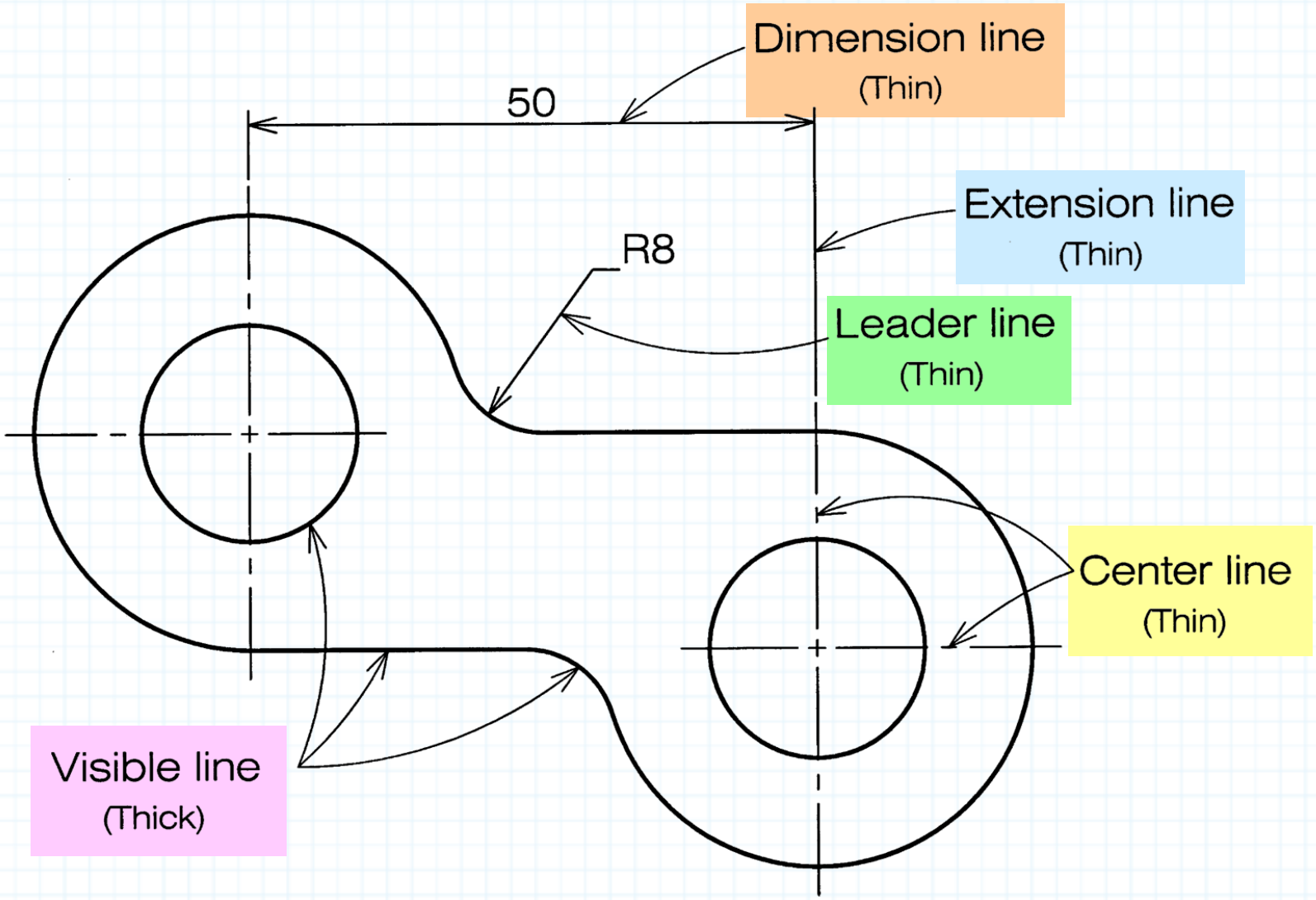

LINE CONVENTION

- Precedence of coincide lines.
- Hidden line drawing.
- Center line drawing.

PRECEDENCE OF LINE

Order of importance

Visible line → **Hidden line** → **Center line**

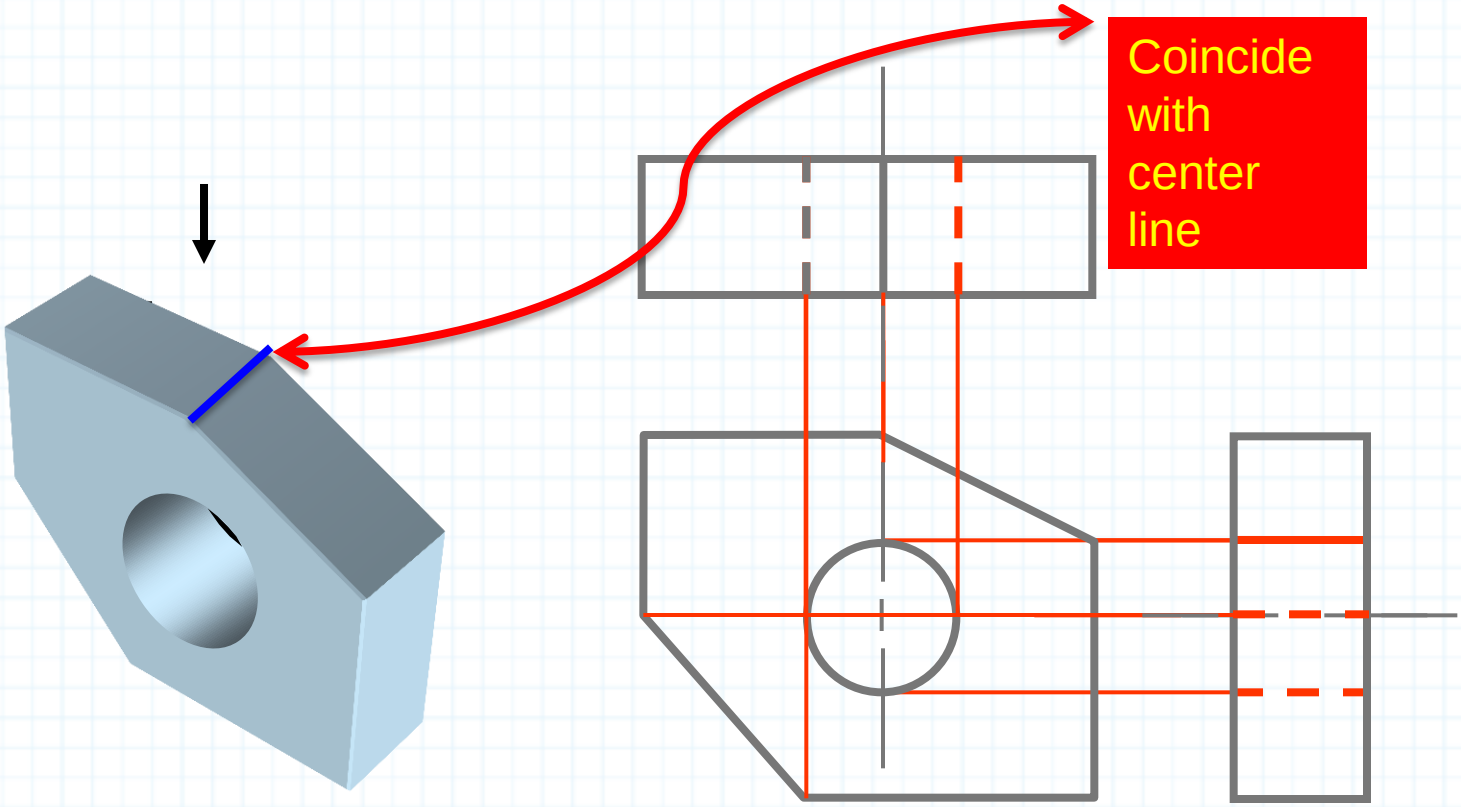

EXAMPLE : Already met convention practice

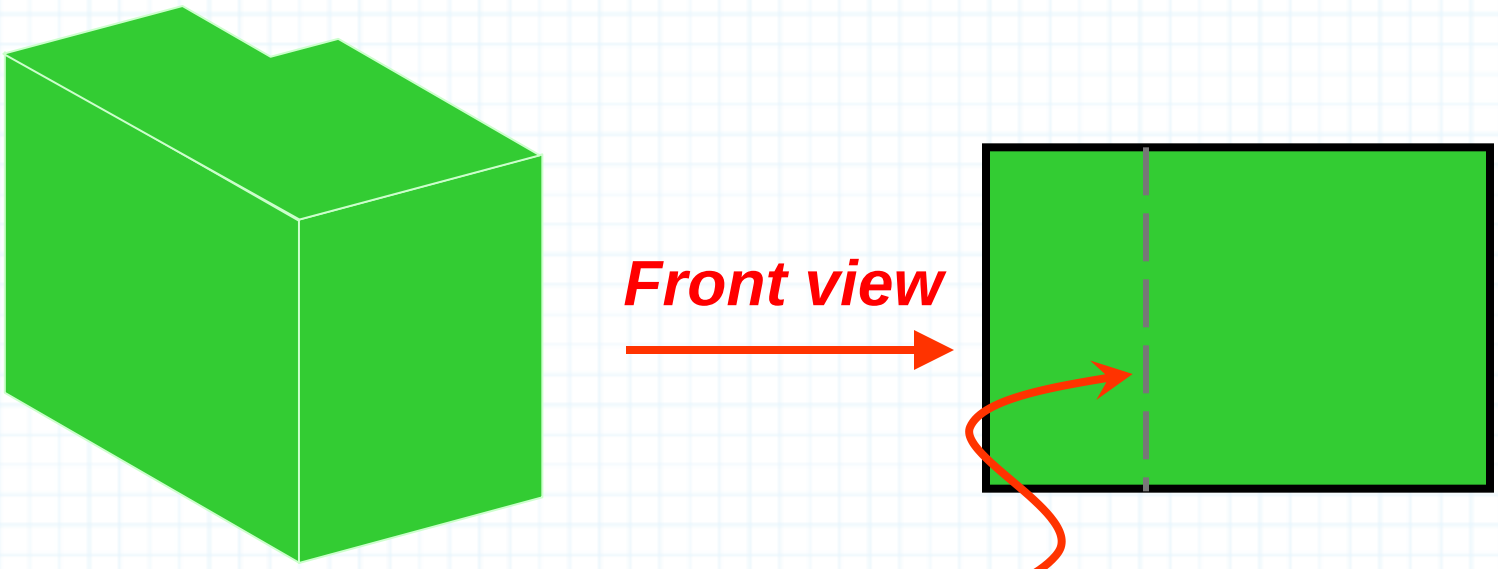

Using a dash line for representing the hidden edge.

CONVENTION PRACTICE

Hiden Line Practice

Hidden line should join a visible line, except it extended from the visible line.

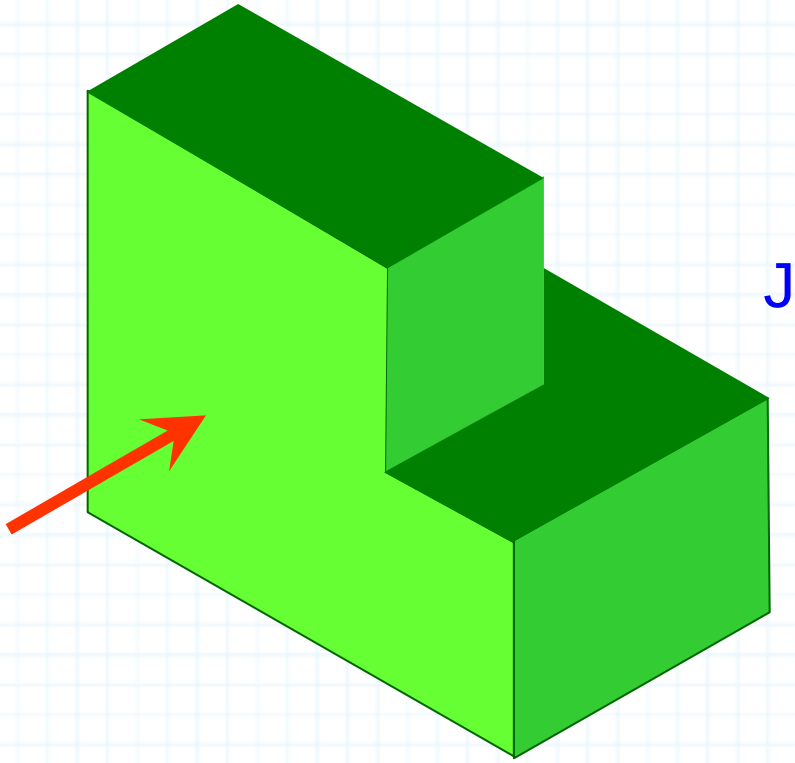

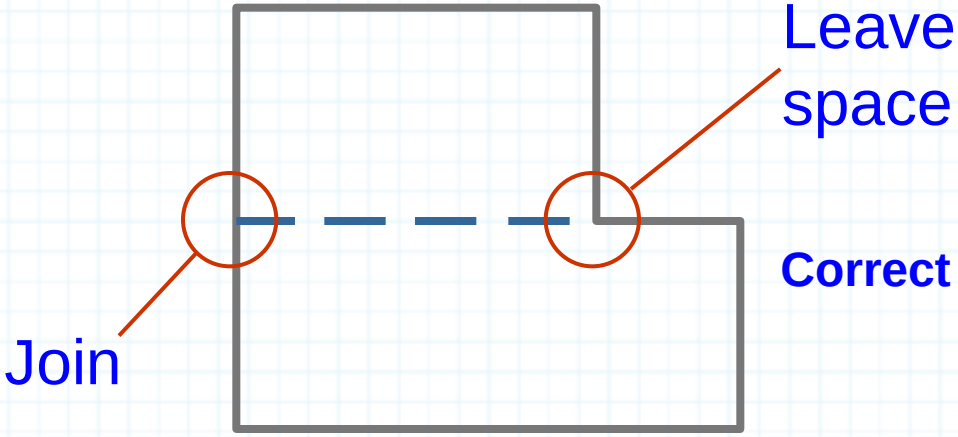

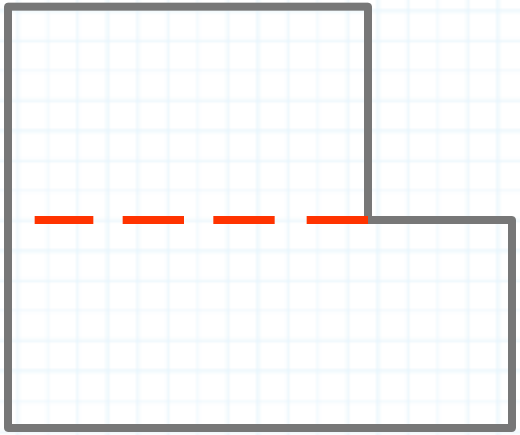

Hiden Line Practice

Hidden line should join a visible line, except it extended from the visible line.

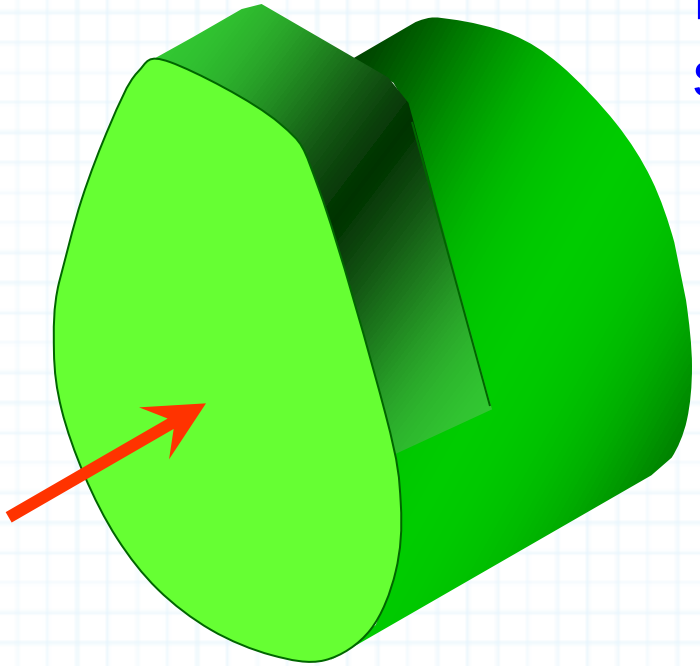

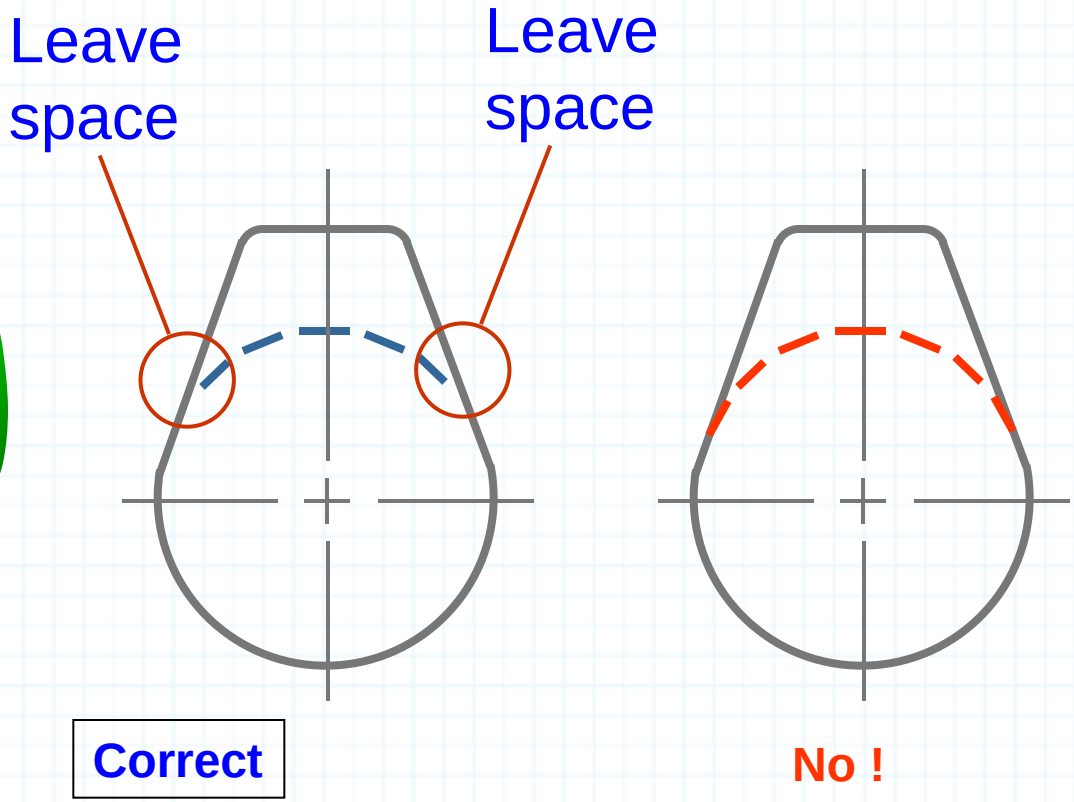

HIDDEN LINE PRACTICE

Hidden line should intersect to form **L** and **T** corners.

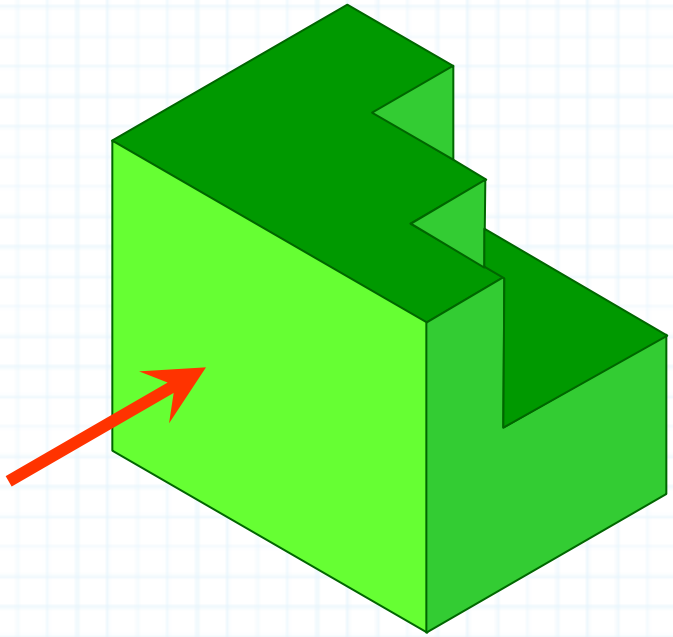

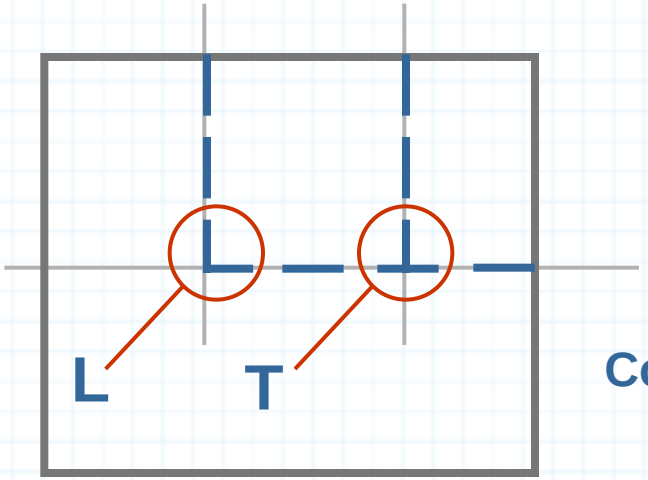

Correct

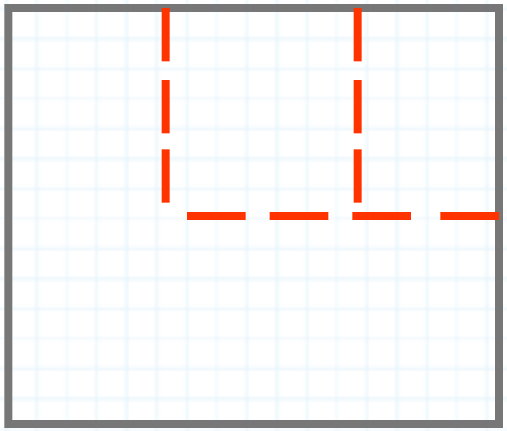

No !

Hiden Line Practice

Hidden arcs should start on a center line.

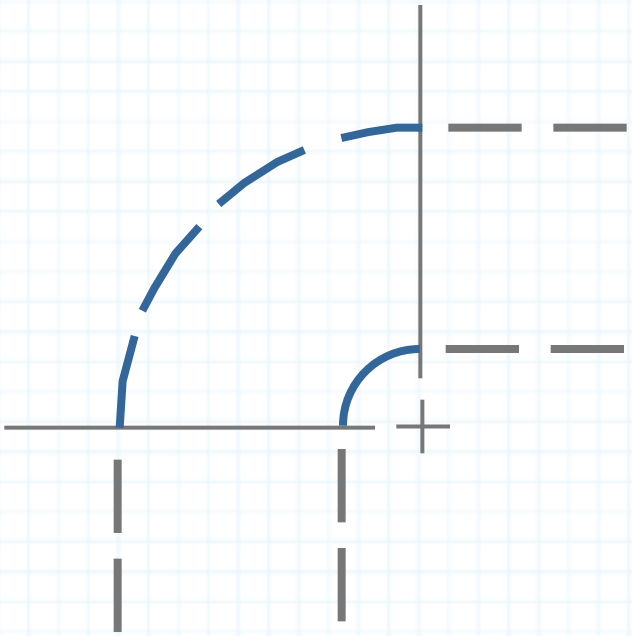

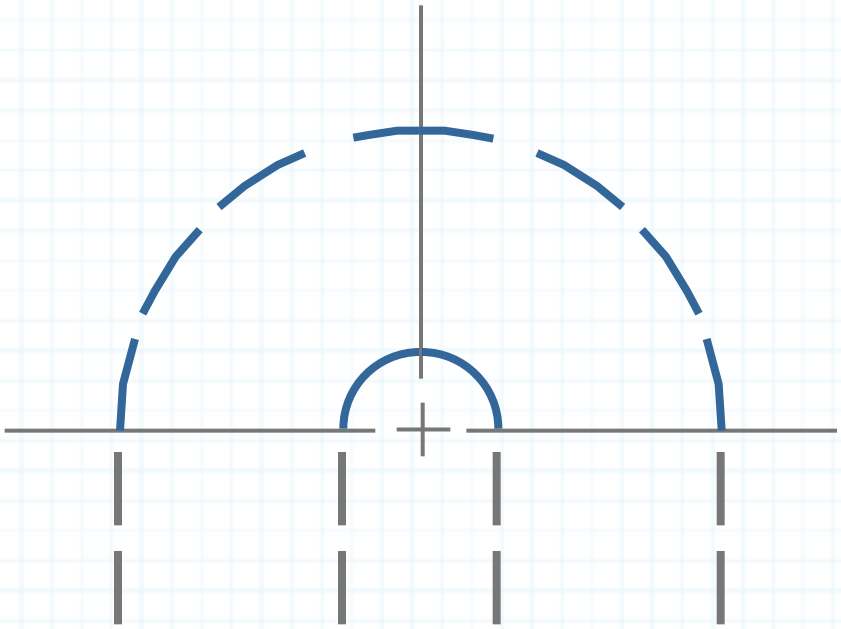

Center Line Practice

In circular view, short dash should cross at the intersections of center line.

For small hole, center line is presented as thin continuous line.

Center line should not extend between views.

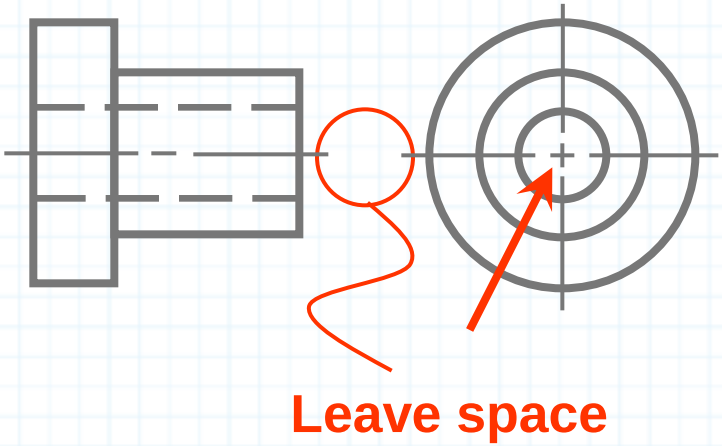

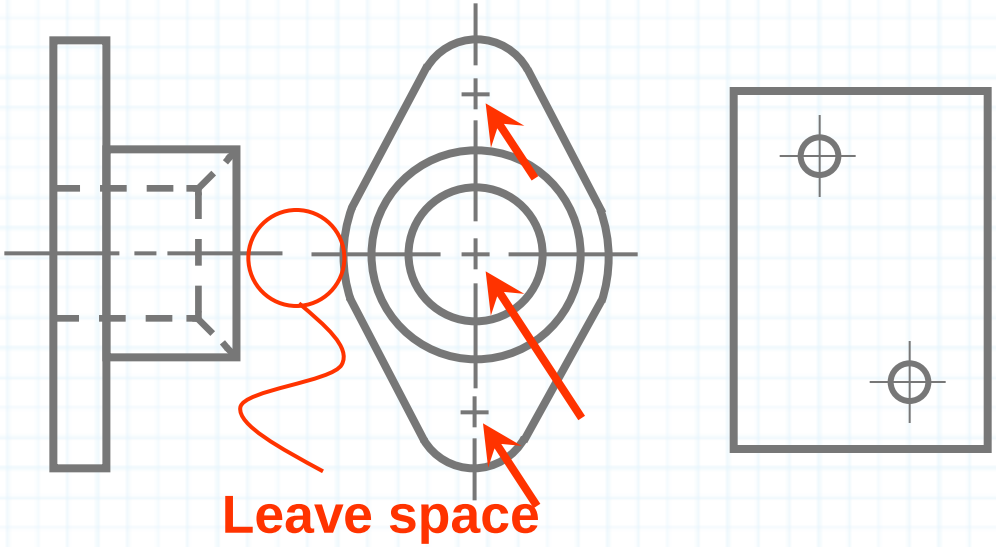

Center Line Practice

Leave the gap when centerline forms a continuation with a visible or hidden line

Center line should always start and end with long dash.

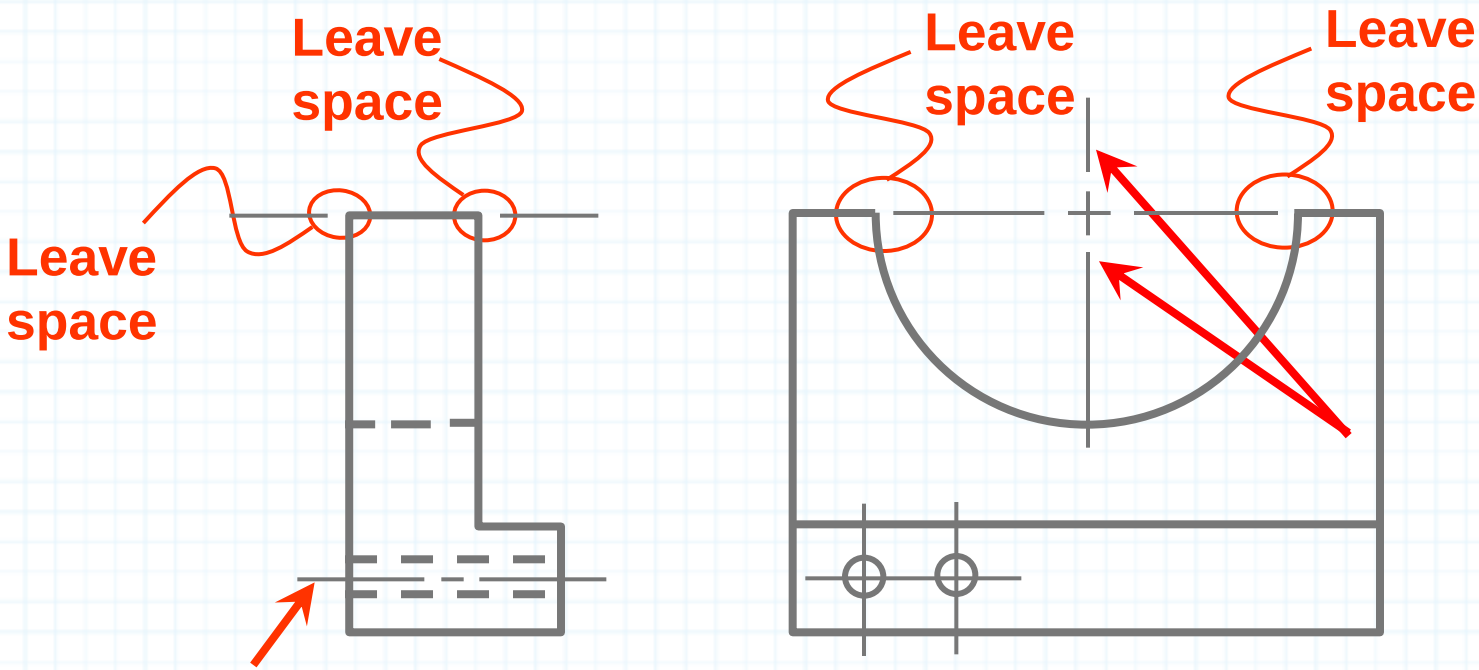

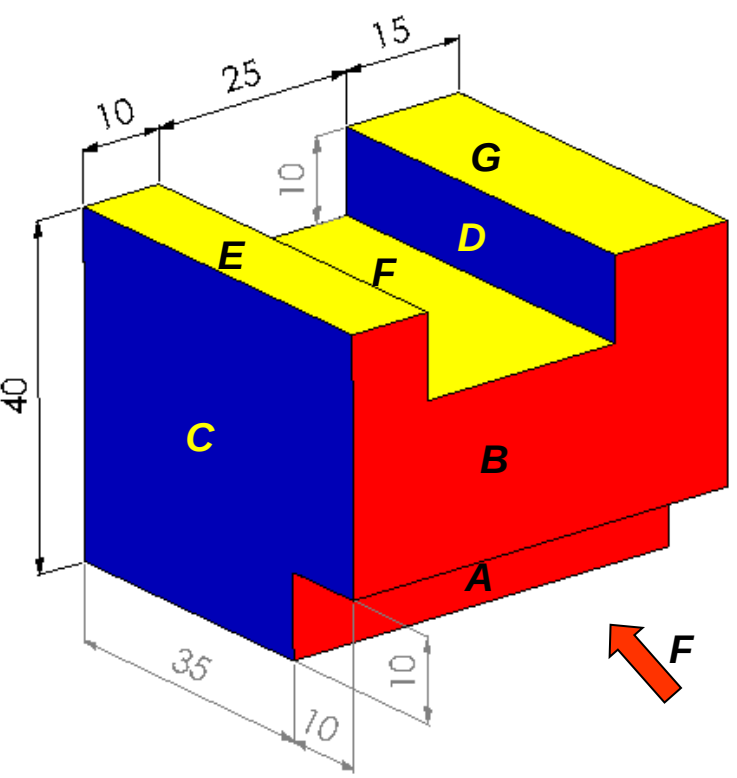
15
25
10
10
G
D
E
F
40
C
B
A
35
10
10
F

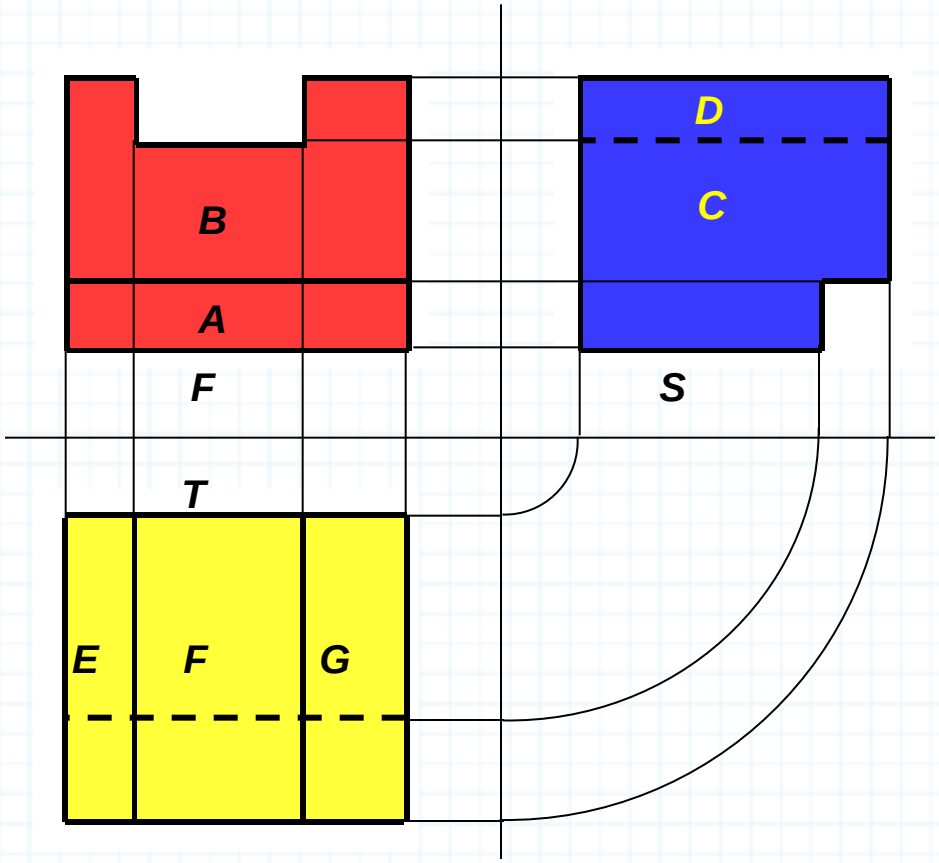
D
C
B
A
F
S
T
E
F
G

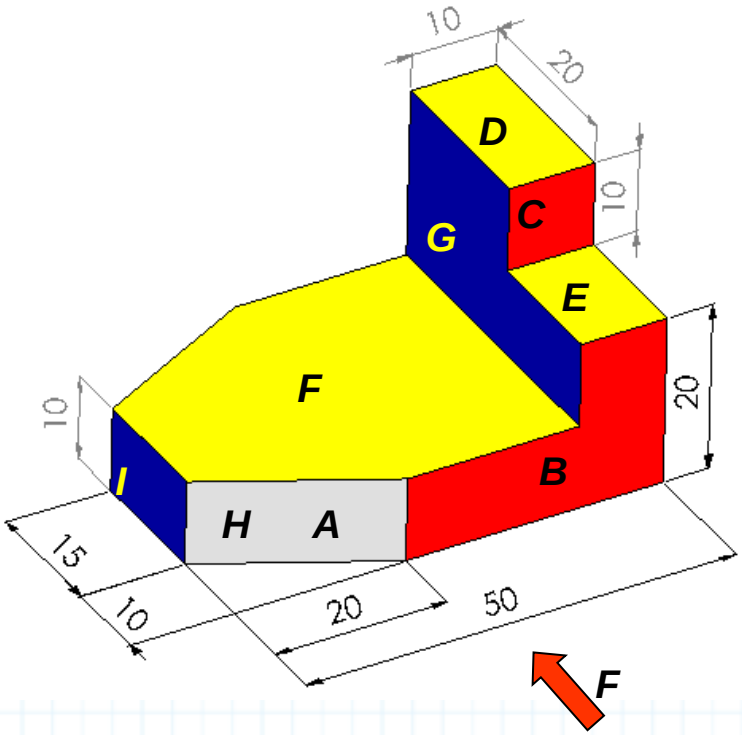
10
20
D
C
10
G
E
F
20
10
I
B
H
A
15
10
20
50
F

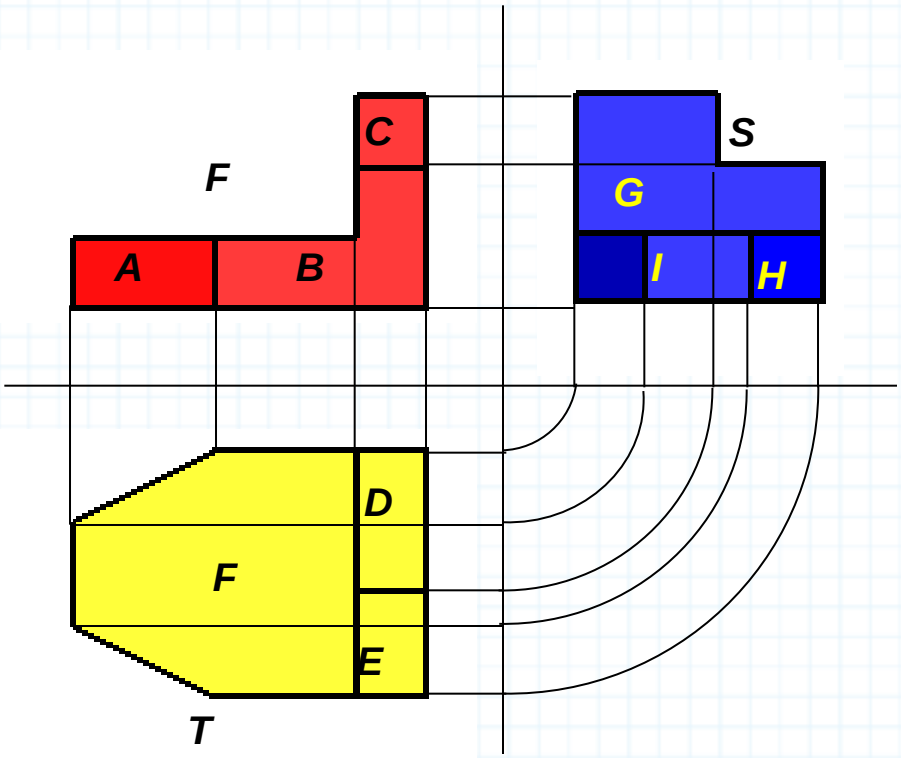
C
S
F
G
A
B
I
H
D
F
E
T

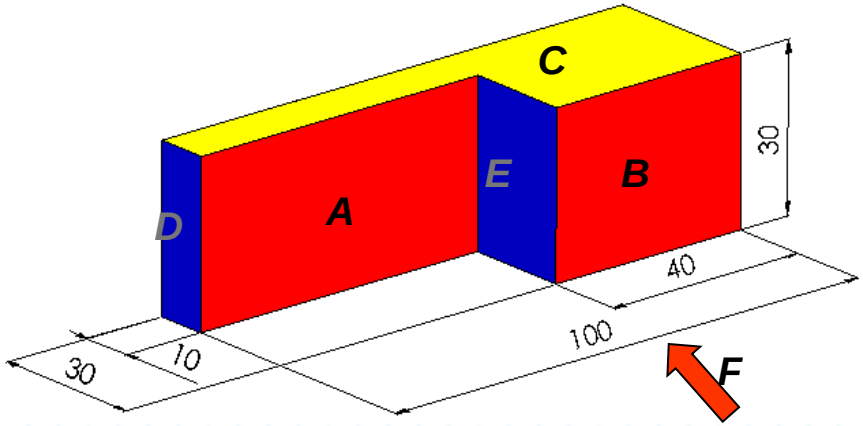
C
A
E
B
D
30
40
100
30
10
F

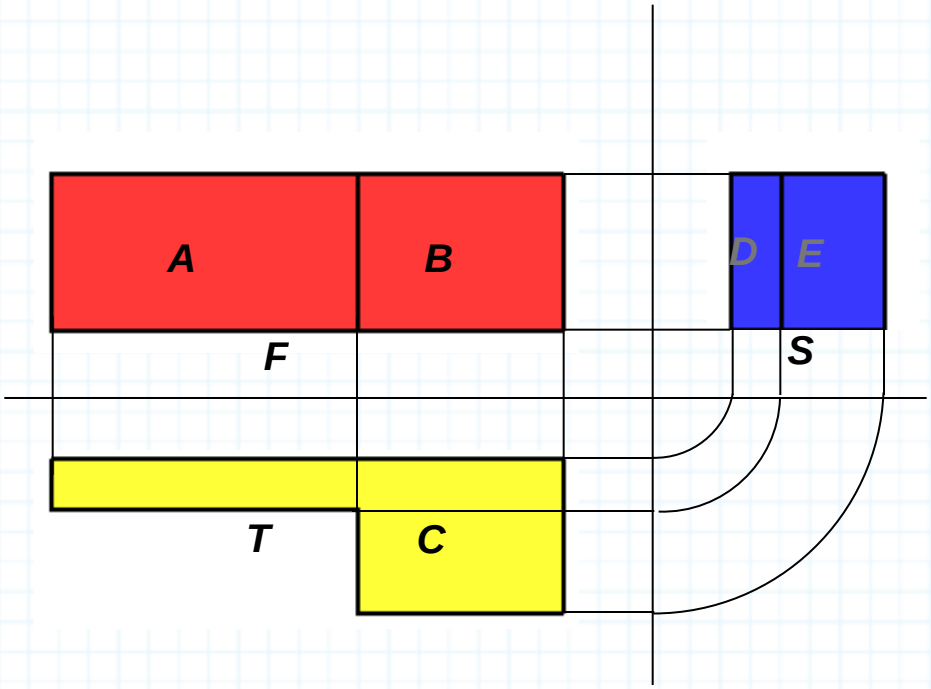
A
B
D
E
F
S
T
C

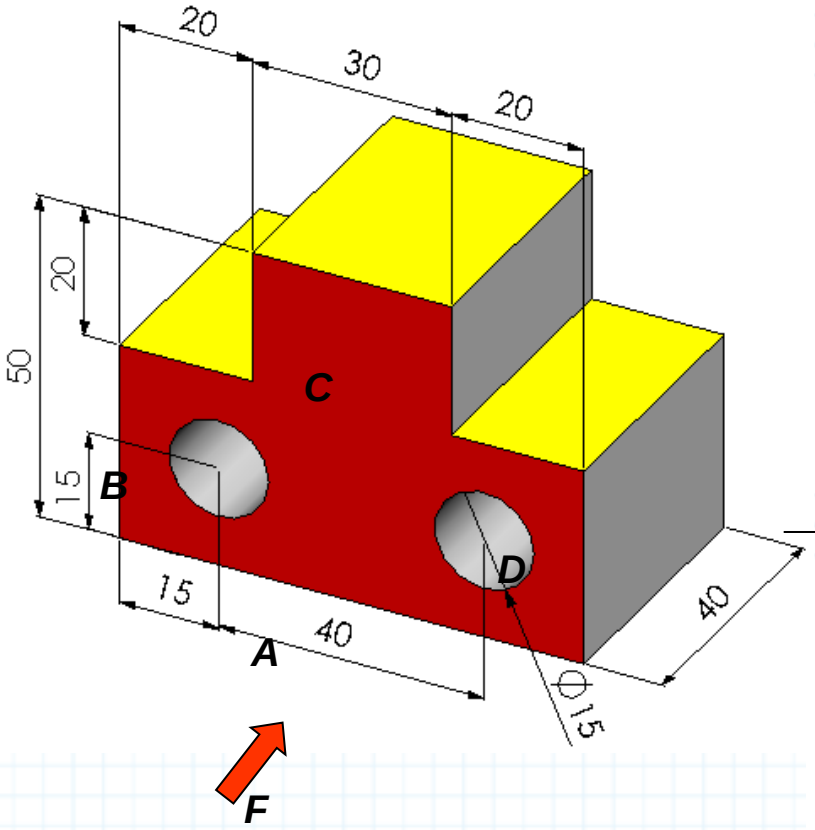
20
30
20
20
50
15
C
B
D
15
40
40
A
Ø15
F

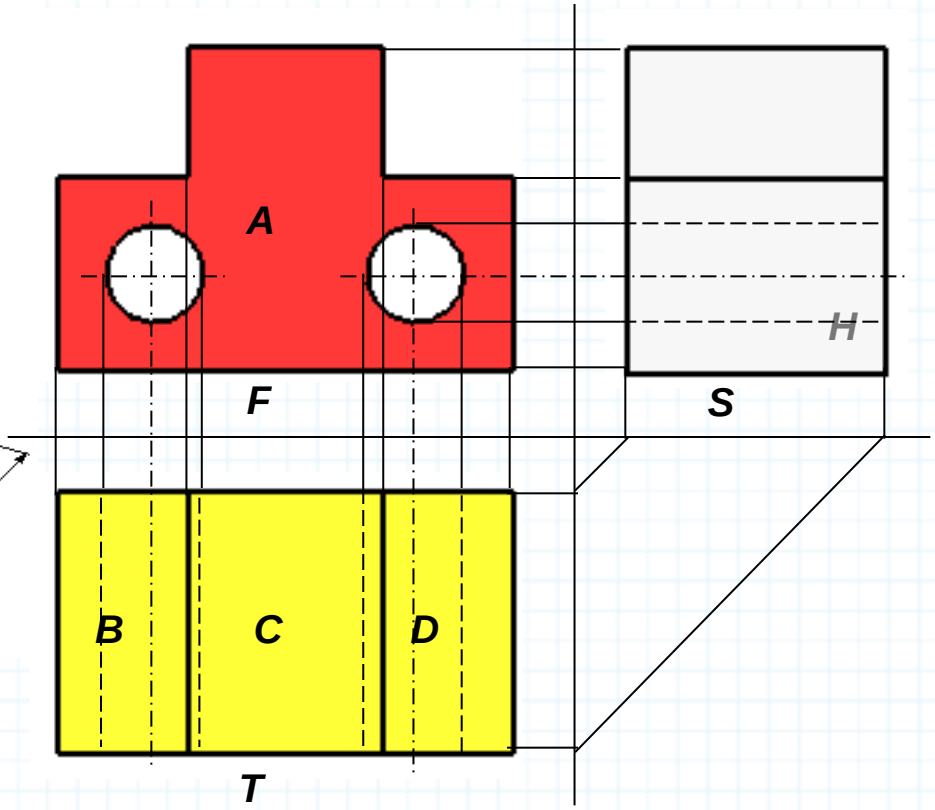
A
H
F
S
B
C
D
T